The Plymouth Student Scientist - Volume 15 - 2022 The Plymouth Student Scientist - Volume 15, No.1 - 2022

2022

A computational fluid dynamic, experimental and empirical analysis of University of Plymouth's Brunel laboratories shell and tube heat exchanger

Hill, L.

Hill, L. (2022) 'A computational fluid dynamic, experimental and empirical analysis of University of Plymouth's Brunel laboratories shell and tube heat exchanger', The Plymouth Student Scientist, 15(1), pp. 69-103.
http://hdl.handle.net/10026.1/19457

The Plymouth Student Scientist
University of Plymouth

Appendix A – Kern method

The following sections present the Kern method calculations used in this paper with Figure 28 outlining the calculation process. This example calculation uses values from the 0.5Lmin^{-1} case. Appendix D summarises the geometric input values used throughout the calculations. Taborek and Spalding (1983) presented the initial method.

The method is outlined in the following way:

- First table – Definition of new known variables
- Second table – Definition of new unknown variables
- Third table – Calculation process for new unknown variables

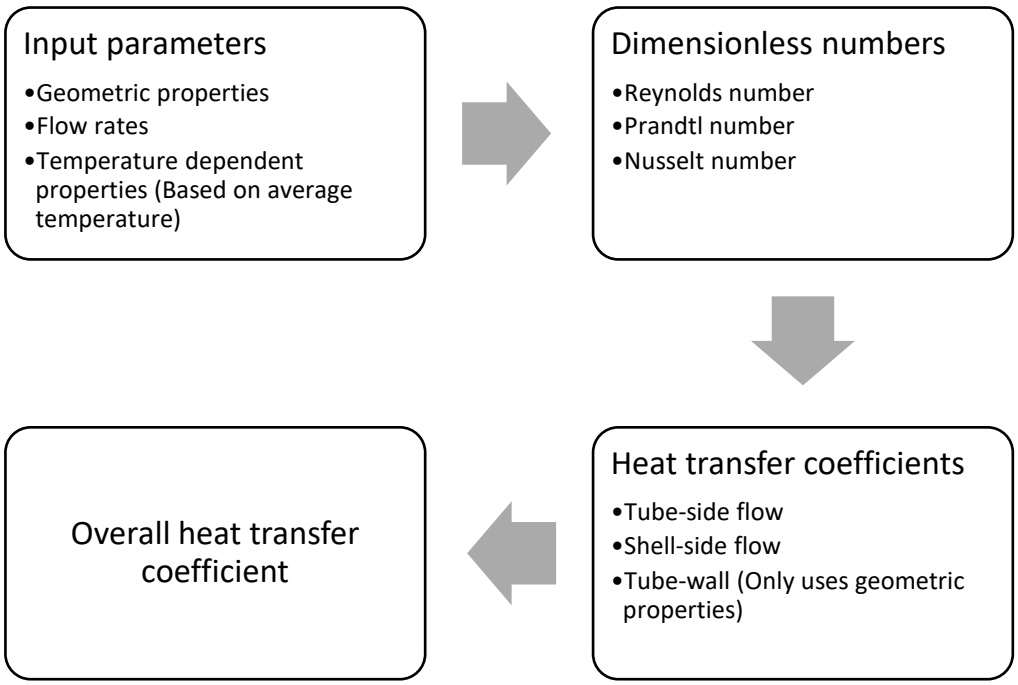

Figure 1: Process outlining the Kern method

Temperature dependent variables polynomial functions

As values for the temperature dependent variables were needed for all calculations water property tables were sourced from a wide range of literature. This data was then plotted to allowing curve fit equations to be determined. The equations are presented below where the input temperature have the units of degree Celsius (°C).

Density:

$$\rho = -((8.554 \times 10^{-8})T^4) + ((3.055 \times 10^{-5})T^3) - \left((6.657 \times 10^{-3})T^2\right) + \left((2.967 \times 10^{-2})T\right) + 999.88$$

Dynamic viscosity:

$$\mu = ((2.831 \times 10^{-15})T^6) - \left((1.224 \times 10^{-12})T^5\right) + \left((2.201 \times 10^{-10})T^4\right) - ((2.186 \times 10^{-8})T^3) + ((1.368 \times 10^{-6})T^2) - \left((5.915 \times 10^{-5})T\right) + 1.783 \times 10^{-3}$$

Specific heat capacity at constant pressure:

$$C_p = -((3.541 \times 10^{-11})T^5) + ((1.203 \times 10^{-8})T^4) - ((1.559 \times 10^{-6})T^3) + ((1.037 \times 10^{-4})T^2) - \left((3.283 \times 10^{-3})T\right) + 4.217$$

Thermal conductivity:

$$\lambda = ((1.945 \times 10^{-8})T^3) - \left((1.098 \times 10^{-5})T^2\right) + \left((2.051 \times 10^{-3})T\right) + 5.655 \times 10^{-1}$$

Sources of water property data:

Douglas, J. F. (2011) *Fluid mechanics*. 6th edn. Harlow, England: Prentice Hall.

Haywood, R. (1990) *Thermodynamic tables in SI (metric) units*. Cambridge: Cambridge University Press.

Hill, G.B., Pring, E. J. and Osborn P. D. (1990) *Cooling towers: principles and practice*. 3rd edn. England: Butterworth-Heinemann.

Holman, J. P. (2010) *Heat transfer*. 10th edn, international edn. Boston, Mass.: McGraw-Hill.

Kays, W. M. and London, A. L. (1998) *Compact heat exchangers*. 3rd edn. Malabar, Fla.: Krieger Publications.

Temperature dependent variables

For the shell and tube flow the temperature dependent variables were determined based on average inlet and outlet temperatures from the experimental results. As the calculation does not specify heat exchanger configuration the temperature values were an average of both configurations. Wall temperature was approximated using the average of the shell and tube side temperatures.

Symbol	Description	Unit	Value		
			Tube (t)	Shell (s)	Wall (w)
T_a	Average temperature	°C	58.15	21.12	39.63
$\rho_{t,s,w}$	Density	kgm^{-3}	984.12	997.81	
$\mu_{t,s,w}$	Dynamic viscosity	$kgm^{-1}s^{-1}$	4.807×10^{-4}	9.764×10^{-4}	6.597×10^{-4}
$\lambda_{t,s,w}$	Thermal conductivity	$Wm^{-1}K^{-1}$	0.652	0.604	0.631
$C_{p\_t,s,w}$	Specific heat at constant pressure	$Jkg^{-1}K^{-1}$	4184.22	4181.47	4178.93

Tube-side heat transfer coefficients

Tube velocity

Symbol	Description	Unit	Value
d_{ti}	Tube inside diameter	m	0.004
N_t	Number of tubes	N/A	7
$\dot{V}_t$	Tube volumetric flow rate	m^3s^{-1}	5×10^{-5} (3 $Lmin^{-1}$)
L_t	Tube length	m	0.182

Symbol	Description	Unit
A_{tt}	Total tube cross sectional area	m^2
u_t	Tube velocity	ms^{-1}

Equation	In use	Value
$A_{tt} = \left(\frac{\pi {d_{ti}}^2}{4}\right) N_t$	$A_{tt} = \left(\frac{\pi \times 0.004^2}{4}\right) \times 6$	8.796×10^{-5} m^2
$u_t = \frac{\dot{V}_t}{A_{tt}}$	$u_t = \frac{5 \times 10^{-5}}{8.796 \times 10^{-4}}$	0.568 ms^{-1}

Tube-wall heat transfer coefficient

Symbol	Description	Unit	Value
k_{ss}	Stainless steel thermal conductivity	$Wm^{-1}K^{-1}$	15.5
d_{to}	Tube outside diameter	m	0.006

Symbol	Description	Unit
h_w	Tube wall heat transfer coefficient	$Wm^{-2}K^{-1}$

Equation	In use	Value
$h_w = \frac{\left(d_{to} \ln\left(\frac{d_{to}}{d_{ti}}\right)\right)}{2k_{ss}}$	$h_t = \frac{\left(0.006 \times \ln\left(\frac{0.006}{0.004}\right)\right)}{2 \times 15.5}$	7.849x10^{-5} Wm^{-2}K^{-1}

Tube-fluid heat transfer coefficient

Symbol	Description	Unit
Re_t	Tube Reynolds number	N/A
Pr_t	Tube Prandtl number	N/A
f	Friction factor	N/A
Pr_w	Wall Prandtl number	N/A
Nu_t	Tube Nusselt number	N/A
h_t	Tube heat transfer coefficient	Wm^{-2}K^{-1}

Equation	In use	Value
$Re_t = \frac{d_{ti} u_t \rho_t}{\mu_t}$	$Re_t = \frac{0.004 \times 0.568 \times 984.12}{4.807 \times 10^{-4}}$	4655.02
$Pr_t = \frac{\mu_t C_{p\_t}}{\lambda_t}$	$Pr_t = \frac{(4.807 \times 10^{-4}) \times 4184.22}{0.652}$	3.09
$f = \left((1.58 \ln(Re_t)) - 3.28\right)^{-2}$	$f = \left((1.58 \times \ln(4655.02)) - 3.28\right)^{-2}$	9.873x10^{-3}
$Pr_w = \frac{\mu_w C_{p\_w}}{\lambda_w}$	$Pr_w = \frac{(6.597 \times 10^{-4}) \times 4178.93}{0.631}$	4.37

Equation – Gnielinski correlation (Ammar and Park, 2020)
$Nu_t = \frac{\left(\frac{f}{8}\right)(Re_t - 1000)Pr_t}{1 + 12.7\left(\frac{f}{8}\right)^{1/2}\left(Pr_t^{2/3} - 1\right)}\left(1 + \left(\frac{d_{ti}}{L_T}\right)^{2/3}\right)\left(\frac{Pr_t}{Pr_w}\right)^{0.11}$

In use	Value
$Nu_t = \frac{\left(\frac{9.873 \times 10^{-3}}{8}\right)(4655.02 - 1000) \times 3.09}{1 + 12.7\left(\frac{9.873 \times 10^{-3}}{8}\right)^{1/2}(3.09^{2/3} - 1)}\left(1 + \left(\frac{0.004}{0.182}\right)^{2/3}\right)\left(\frac{3.09}{4.37}\right)^{0.11}$	9.64

Equation	In use	Value
$h_t = \frac{Nu_t \lambda_t}{d_{ti}}$	$h_t = \frac{9.67 \times 0.652}{0.0004}$	1569.72 Wm^{-2}K^{-1}

Shell-side heat transfer coefficients

Geometric properties

Symbol	Description	Unit	Value
P_t	Pitch	m	0.015
d_{si}	Shell inside diameter	m	0.05

Symbol	Description	Unit
d_e	Equivalent diameter	m
L_b	Baffle spacing	m
L_c	Tube clearance	m
A_s	Bundle cross flow area	m^2

Equation	In use	Value
$d_e = \frac{4\left(\frac{(P_t)^2\sqrt{3}}{4} - \frac{\pi(d_{ti})^2}{8}\right)}{\pi(d_{si}/2)}$	$d_e = \frac{4\left(\frac{(0.015)^2\sqrt{3}}{4} - \frac{\pi(0.006)^2}{8}\right)}{\pi(0.05/2)}$	0.0353 m
$L_b = \frac{L_t}{N_b + 1}$	$L_b = \frac{0.182}{3 + 1}$	0.0455 m
$L_c = P_t - d_{to}$	$L_c = 0.015 - 0.006$	0.009 m
$A_s = \frac{d_{si}L_cL_b}{P_t}$	$A_s = \frac{0.05 \times 0.009 \times 0.046}{0.015}$	0.00137 m^2

Shell-side heat transfer coefficient

Symbol	Description	Unit	Value
$\dot{V}_s$	Shell volumetric flow rate	$Lmin^{-1}$	0.5

Symbol	Description	Unit
$\dot{m}_s$	Shell mass flow rate	kgs^{-1}
Re_s	Shell Reynolds number	N/A
Pr_s	Shell Prandtl number	N/A
Nu_s	Shell Nusselt number	N/A
h_s	Shell heat transfer coefficient	$Wm^{-2}K^{-1}$

Equation	In use	Value
$\dot{m}_s = \left(\frac{\dot{V}_s}{60000}\right)\rho_s$	$\dot{m}_s = \left(\frac{0.5}{60000}\right) \times 997.81$	8.315×10^{-4} kgs^{-1}
$Re_s = \frac{\dot{m}_s d_e}{\mu_s A_s}$	$Re_s = \frac{8.315 \times 10^{-4} \times 0.0353}{9.764 \times 10^{-4} \times 0.00137}$	220.53
$Pr_s = \frac{\mu_s C_{p\_s}}{\lambda_s}$	$Pr_s = \frac{9.764 \times 10^{-4} \times 4181.47}{0.604}$	6.76

Equation		
$Nu_s = 0.023 Re_s^{0.55} Pr_s^{\frac{1}{3}} \left(\frac{\mu_s}{\mu_w}\right)^{0.14}$		
In use		Value
$Nu_s = 0.023 \times 220.53^{0.55} \times 6.76^{\frac{1}{3}} \cdot \left(\frac{9.764 \times 10^{-4}}{6.597 \times 10^{-4}}\right)^{0.14}$		12.66
Equation	In use	Value
$h_s = \frac{Nu_s \lambda_s}{d_e}$	$h_t = \frac{6.76 \times 0.604}{0.0353}$	8.6 $m^{-2}K^{-1}$

Overall heat transfer coefficient calculation

Symbol	Description	Unit
U_k	Overall heat transfer coefficient	$Wm^{-2}K^{-1}$

Equation	In use	Value
$U_k = \frac{1}{\frac{1}{h_s} + \frac{d_{to}}{h_t d_{ti}} + h_w}$	$U_k = \frac{1}{\frac{1}{216.43} + \frac{0.006}{7.849 \times 10^{-4} \times 0.004} + 1569.72}$	176.85 $Wm^{-2}K^{-1}$

Appendix B – Bell-Delaware method

Within this section an example calculation of the Bell-Delaware method is carried out. This was applied to the UHX geometry. Initially global parameters are determined and then flow rate specific calculations. For this example, the calculations are for the 0.5Lmin^{-1} case. Figure 29 presents an overview of the parameters used within the Bell-Delaware method. Here the Reynolds number specific correction factors and non-Reynolds specific correction factors have been outlined. Figure 30 shows the calculation steps to determine the overall heat transfer coefficient and the subsequent variables used to determine it.

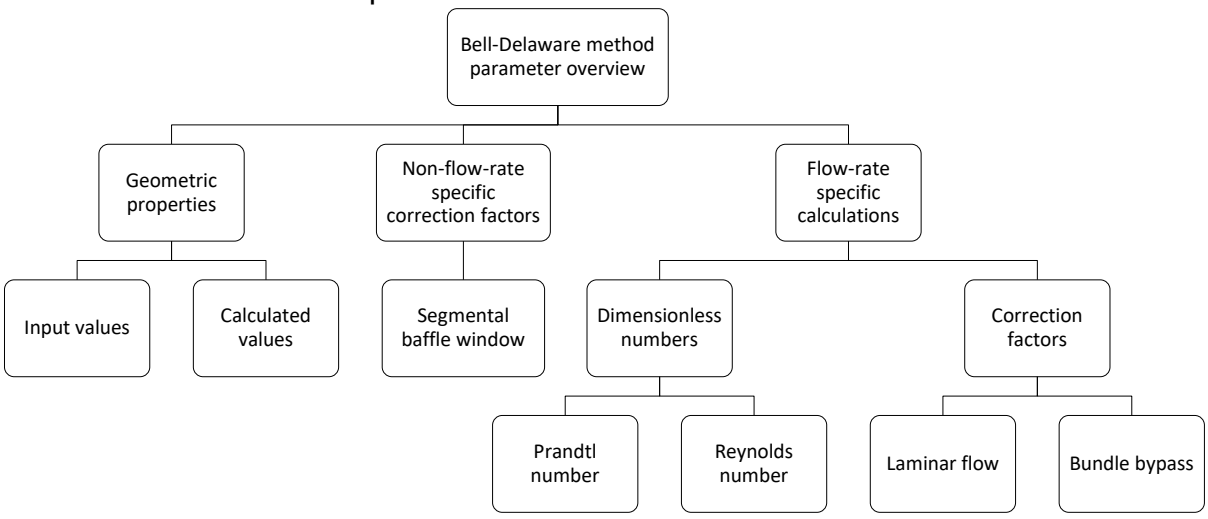

Figure 2: Parameter overview for the Bell-Delaware method

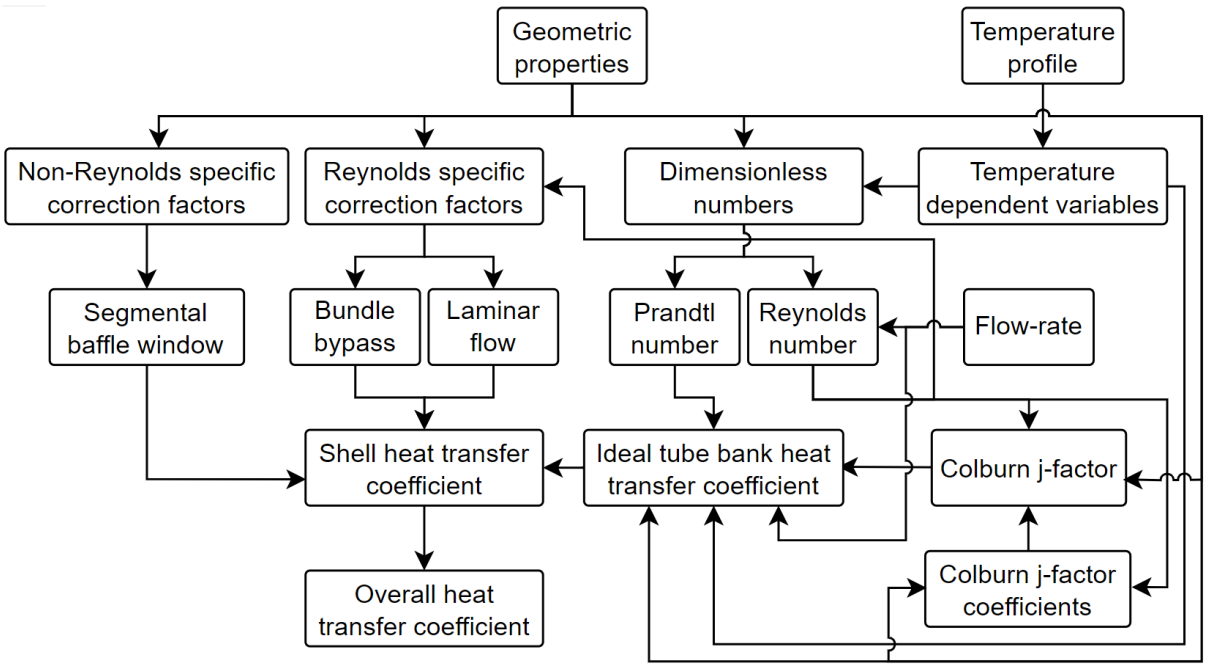

Figure 3: Flowchart to calculate the Bell-Delaware overall heat transfer coefficient

Geometric properties

Geometric input values

Symbol	Description	Unit	Value
d_{to}	Tube outside diameter	m	0.006
P_t	Pitch	m	0.015
d_{si}	Shell inside diameter	m	0.05
L_{bb}	Shell-to-tube bypass clearance	m	0.014
L_t	Tube length	m	0.182
N_b	Number of baffles	N/A	3

Symbol	Description	Unit
d_{ocl}	Tube bundle circumscribed circle	m
L_b	Baffle spacing	m
L_c	Tube clearance	m
A_s	Bundle cross flow area	m^2

Equation	In use	Value
$d_{ocl} = d_{si} - L_{bb}$	$d_{ocl} = 0.05 - 0.014$	0.036 m
$L_b = \frac{L_t}{N_b + 1}$	$L_b = \frac{0.182}{3 + 1}$	0.0455 m
$L_c = P_t - d_{to}$	$L_c = 0.015 - 0.006$	0.009 m
$A_s = \frac{d_{si} L_c L_b}{P_t}$	$A_s = \frac{0.05 \times 0.009 \times 0.046}{0.015}$	0.00137 m^2

Cross-flow area calculation

Symbol	Description	Unit	Value
d_{ctl}	Circle diameter through centre of tube row	m	0.030

Symbol	Description	Unit
S_m	Cross-flow area	m^2

Equation
$S_m = L_B \left(L_{bb} + \frac{d_{ctl}}{P_t} (P_t - d_{to}) \right)$

In use	Value
$S_m = 0.0455 \left(0.014 + \frac{0.03}{0.015} (0.015 - 0.06) \right)$	0.00146m^2

Temperature dependent variables

These are the same values that were used for the Kern method

Symbol	Description	Unit	Value	
			Shell (s)	Wall (w)
T_a	Average temperature	°C	21.12	39.63
ρ_s	Density	kgm^{-3}	997.81	
$\mu_{s,w}$	Dynamic viscosity	$kgm^{-1}s^{-1}$	9.764×10^{-4}	6.597×10^{-4}
λ_s	Thermal conductivity	$Wm^{-1}K^{-1}$	0.604	
C_{p_s}	Specific heat at constant pressure	$Jkg^{-1}K^{-1}$	4181.47	

Reynolds and Prandtl number calculation

Symbol	Description	Unit	Value
$\dot{V}_s$	Shell volumetric flow rate	$Lmin^{-1}$	0.5

Symbol	Description	Unit
$\dot{m}_s$	Shell mass flow rate	kgs^{-1}
Re_s	Shell Reynolds number	N/A
Pr_s	Shell Prandtl number	N/A

Equation	In use	Value
$\dot{m}_s = \left(\frac{\dot{V}_s}{60000}\right)\rho_s$	$\dot{m}_s = \left(\frac{0.5}{60000}\right) \times 997.81$	8.315×10^{-4} kgs^{-1}
$Re_s = \frac{\dot{m}_s d_{to}}{\mu_s S_m}$	$R_{e_s} = \frac{(8.315 \times 10^{-4}) \times 0.06}{(9.764 \times 10^{-4}) \times 0.00146}$	35.09
$Pr_s = \frac{\mu_s C_{p\_s}}{\lambda_s}$	$P_{r_s} = \frac{(9.764 \times 10^{-4}) \times 4181.47}{0.604}$	6.76

Correction factors determination

Segmental baffle window correction factor

Symbol	Description	Unit	Value
L_{bh}	Baffle height	m	0.029

Symbol	Description	Unit
$B_{c\%}$	Baffle cut percentage	%
θ_{ctl}	Baffle cut intersection with tube centres	°(deg)
F_w	Fraction of tubes in one baffle window	N/A
F_c	Fraction of tubes in pure cross flow	N/A
J_c	Segmental baffle window correction factor	N/A

Equation	In use	Value
$B_{c\%} = \left(\frac{d_{si} - L_{bh}}{d_{si}}\right) \times 100$	$B_{c\%} = \left(\frac{0.05 - 0.029}{0.05}\right) \times 100$	42%
$\theta_{ctl} = 2\cos^{-1}\left(\frac{d_{si}}{d_{ctl}}\left(1 - 2\left(\frac{B_{c\%}}{100}\right)\right)\right)$	$\theta_{ctl} = 2\cos^{-1}\left(\frac{0.05}{0.03}\left(1 - 2\left(\frac{42}{100}\right)\right)\right)$	149.07°
$F_w = \frac{\theta_{ctl}}{360} - \frac{\sin(\theta_{ctl})}{2\pi}$	$F_w = \frac{149.07}{360} - \frac{\sin(149.07)}{2\pi}$	0.332
$F_c = 1 - 2F_w$	$F_c = 1 - 2 \times 0.332$	0.335
$J_c = 0.55 + 0.72F_c$	$J_c = 0.55 + 0.72 \times 0.335$	0.792

Laminar Flow Correction Factor coefficient

This correction factor was only used for the 0.5 and 1Lmin^{-1} calculation as the Reynolds numbers were below 100. The equation used for the effective row distance coefficient (C_{pp}) is determined from Taborek and Spalding (1983) based on the 30° pitch angle.

Symbol	Description	Unit
C_{pp}	Effective row distance coefficient	m
N_{tcc}	Number of tube rows crossed between baffle tips	N/A
N_{tcw}	Effective number of tube rows crossed	N/A
N_c	Number of tube rows crossed	N/A
J_{rr}	Laminar correction factor coefficient	N/A
J_r	Laminar flow correction factor	N/A

Equation	In use	Value
$C_{pp} = 0.866P_t$	$C_{pp} = 0.866 \times 0.015$	0.013m
$N_{tcc} = \frac{d_{si}}{C_{pp}P_t}\left(1 - 2\left(\frac{B_{c\%}}{100}\right)\right)$	$N_{tcc} = \frac{0.05}{0.013 \times 0.015}\left(1 - 2\left(\frac{42}{100}\right)\right)$	41.06

Equation		
$N_{tcw} = \frac{0.8}{C_{pp}P_t}\left(d_{si}\left(\frac{B_{c\%}}{100}\right) - \frac{d_{si} - d_{ctl}}{2}\right)$		
In use		Value
$N_{tcw} = \frac{0.8}{0.013 \times 0.015}\left(0.05\left(\frac{42}{100}\right) - \frac{0.05 - 0.03}{2}\right)$		45.16
Equation	In use	Value
$N_c = \frac{N_{tcc} + N_{tcw}}{N_b + 1}$	$N_c = \frac{0.616 + 0.677}{3 + 1}$	544.88
$J_{rr} = \left(\frac{10}{N_c}\right)^{0.18}$	$J_{rr} = \left(\frac{10}{544.88}\right)^{0.18}$	0.529
$J_r = J_{rr} + \left(\frac{20 - Re_s}{80}\right)(J_{rr} - 1)$	$J_r = 0.529 + \left(\frac{20 - 35.09}{80}\right)(0.529 - 1)$	0.62

Bundle bypass correction factor

As the value for Reynolds number was less than 100 the value of the bundle bypass correction factor coefficient was set at 1.35 as per the specification in the outlining document. For the 2 and 3Lmin^{-1} calculation this value was decreased to 1.25 as the value of the Reynolds number increased above 100. As no sealing strips are used the ratio of sealing strips to number of effective tube rows crossed between baffle tips, r_{ss}, is 0.

Symbol	Description	Unit	Value
N_{ss}	Number of sealing strips	N/A	0
C_{bh}	Bundle bypass correction factor coefficient	m	1.35

Symbol	Description	Unit
S_b	Bypass area within one baffle	m^2
F_{shp}	Fraction of bypass area to overall cross flow area	N/A
J_b	Bundle bypass correction factor	N/A

Equation	In use	Value
$r_{ss} = \frac{N_{ss}}{N_{tcc}}$	$r_{ss} = \frac{0}{41.06}$	0
$S_b = L_b(d_{si} - d_{ocl})$	$S_b = 0.0455 \times (0.05 - 0.036)$	6.37x10^{-4}
$F_{shp} = \frac{S_b}{S_m}$	$F_{shp} = \frac{6.37 \times 10^{-4}}{0.036}$	0.438
$J_b = e^{-C_{bh}F_{shp}\left(1-\sqrt[3]{2r_{ss}}\right)}$	$J_b = e^{-1.35\times0.438\times\left(1-\sqrt[3]{2\times0}\right)}$	0.554

Colburn j-factor calculation

The values for the Colburn j-factor coefficients were determined from tabular data from Taborek and Spalding (1983) relating Reynolds number and pitch angle to the Colburn j-factor coefficients.

Symbol	Description	Unit	Value
CJ_{a_1}	Colburn j-factor coefficient a1	N/A	1.36
CJ_{a_2}	Colburn j-factor coefficient a2	N/A	-0.657
CJ_{a_3}	Colburn j-factor coefficient a3	N/A	1.45
CJ_{a_4}	Colburn j-factor coefficient a4	N/A	0.519

Symbol	Description	Unit
CJ_a	Colburn j-factor coefficient a	N/A
j_i	Colburn j-factor	N/A

Equation	In use	Value
$CJ_a = \frac{CJ_{a\_3}}{1 + 0.14(Re_s)^{CJ_{a\_4}}}$	$CJ_a = \frac{1.45}{1 + 0.14(35.09)^{0.519}}$	0.768
$j_i = CJ_{a\_1}\left(\frac{1.33}{P_t/d_s}\right)^{CJ_a}(Re_s)^{CJ_{a\_2}}$	$j_i = 1.36\left(\frac{1.33}{0.015/0.006}\right)^{0.768}(35.09)^{-0.657}$	0.081

Ideal Tube Bank Based Heat Transfer Coefficient Calculation

Symbol	Description	Unit
h_i	Ideal tube bank heat transfer coefficient	N/A

Equation
$h_i = j_i C_{p\_s}\left(\frac{\dot{m}_s}{A_s}\right)\left(\frac{1}{Pr_s}\right)^{\frac{2}{3}}\left(\frac{\mu_s}{\mu_w}\right)^{0.14}$

In use	Value
$h_i = 0.081 \times 4181.47 \times \left(\frac{8.315 \times 10^{-4}}{0.00137}\right) \times \left(\frac{1}{6.76}\right)^{\frac{2}{3}} \times \left(\frac{9.764 \times 10^{-4}}{6.597 \times 10^{-4}}\right)^{0.14}$	608.74 $Wm^{-2}K^{-1}$

Overall heat transfer coefficient calculation

Symbol	Description	Unit
h_s	Shell heat transfer coefficient	$Wm^{-2}K^{-1}$
U_{bd}	Bell-Delaware overall heat transfer coefficient	$Wm^{-2}K^{-1}$

Equation	In use	Value
$h_s = h_i(J_c J_b J_r)$	$h_s = 608.74 \times (0.792 \times 0.554 \times 0.62)$	164.86 $Wm^{-2}K^{-1}$
U_{bd}	h_s	164.86 $Wm^{-2}K^{-1}$

Table 1: Parallel-flow outlet temperatures: CFD, UHX

Shell volumetric flow rate ($Lmin^{-1}$)	Outlet temperature (K)			
	Shell		Tube	
	Mean	1 SD	Mean	1 SD
0.5	302.30	0.0067	328.96	0.0095
1.0	297.56	0.0710	327.68	0.0053
2.0	293.14	0.0858	325.97	0.0167
3.0	291.38	0.1068	325.14	0.0026

Table 2: Counter-flow outlet temperatures: CFD, UHX

Shell volumetric flow rate ($Lmin^{-1}$)	Outlet temperature (K)			
	Shell		Tube	
	Mean	1 SD	Mean	1 SD
0.5	302.35	0.0375	329.50	0.0086
1.0	297.27	0.0622	327.39	0.0237
2.0	293.41	0.1744	325.79	0.0175
3.0	291.94	0.1453	324.69	0.0170

Appendix C – Validation case analysis

Geometry

Table 3: Validation heat exchanger geometry details

Symbol	Description	Unit	Value
D_s	Shell diameter	mm	90
d_{to}	Tube outside diameter	mm	20
P_t	Pitch	mm	30
θ_{tp}	Tube characteristic layout angle	°	30
N_t	Number of tubes	N/A	7
L_s	Shell length	mm	600
B_c	Baffle cut	%	36
L_b	Baffle length	mm	57.6
L_{bc}	Centre baffle space	mm	86
N_b	Number of baffles	N/A	6
t_b	Baffle thickness	mm	3
$D_{i,o}$	Inlet/Outlet diameter[a]	mm	30
$L_{b\_i,o}$	Length from shell edge to inlet/outlet centre	mm	25
L_i	Inlet length from shell centre	mm	65
L_o	Outlet length from shell centre	mm	140

[a]Approximate determined using outlet velocity and mass flow rate

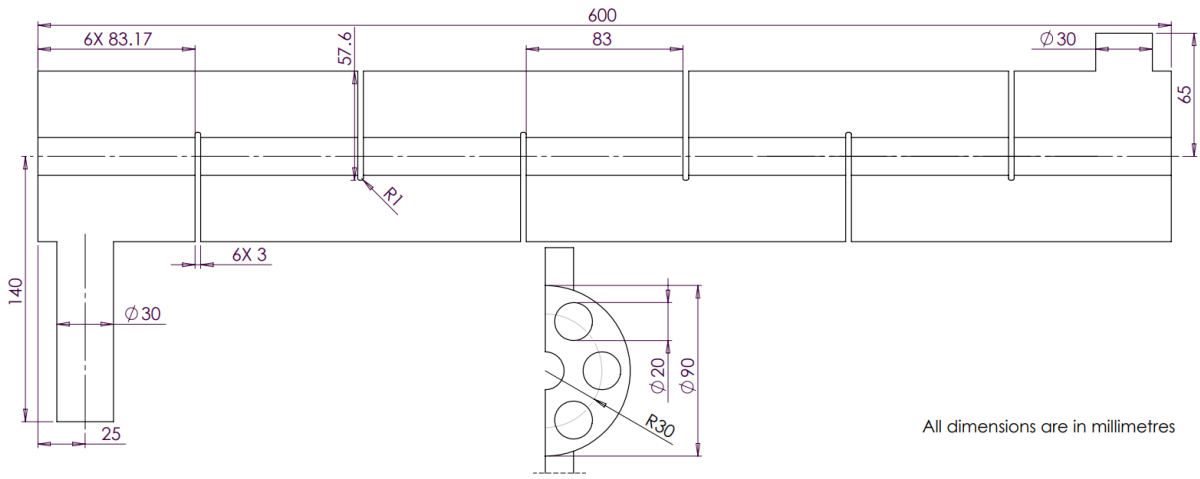

Figure 4: Illustration of the validation geometry

Mesh settings

Table 4: Mesh settings excluding face sizing's

Element size	Unit	Value	Option
Overall mesh parameters			
Element size	mm	1	
Max size	mm	5	
Capture curvature			Yes
Inflations (Shell and tube walls)			
Maximum layers	N/A	10	
Inflation option			Smooth transition
Sweep method – Outlet			
Face mesh type			All Tri
Number of divisions	N/A	53	
Sweep bias type			_____ ___ _ _
Sweep bias	N/A	50	
Sweep method – Inlet			
Face mesh type			All Tri
Number of divisions	N/A	10	
Sweep bias type			_____ ___ _ _
Sweep bias	N/A	25	

Mesh sensitivity study

Mesh settings

Table 18 and Table 19 and set out the mesh setting used for the mesh sensitivity study with Figure 32 illustrating the mesh sizing's.

Table 5: Mesh sensitivity shell face sizing's

Number of nodes (Million)	Face sizing (mm)				
	Tube walls	Shell walls	End faces 4–6	Baffle ends 1–3	Baffle ends 4–6
3.32	0.550	0.600	0.575	0.575	0.550
10.70	0.450	0.525	0.500	0.500	0.500
14.53	0.375	0.475	0.425	0.425	0.400
19.94	0.325	0.425	0.350	0.325	0.300
26.06	0.550	0.600	0.575	0.575	0.550

Table 6: Mesh sensitivity study inlet/outlet sizing's

Number of nodes (Million)	Sizing's inlet (mm)			Sizing's outlet (mm)		
	Chamfer face	Edge	Chamfer edge	Chamfer face	Edge	Chamfer edge
3.32	0.40	0.40	0.40	0.35	0.35	0.35
10.70	0.30	0.30	0.30	0.30	0.30	0.30
14.53	0.25	0.25	0.25	0.20	0.20	0.20
19.94	0.20	0.20	0.20	0.10	0.10	0.10
26.06	0.40	0.40	0.40	0.35	0.35	0.35

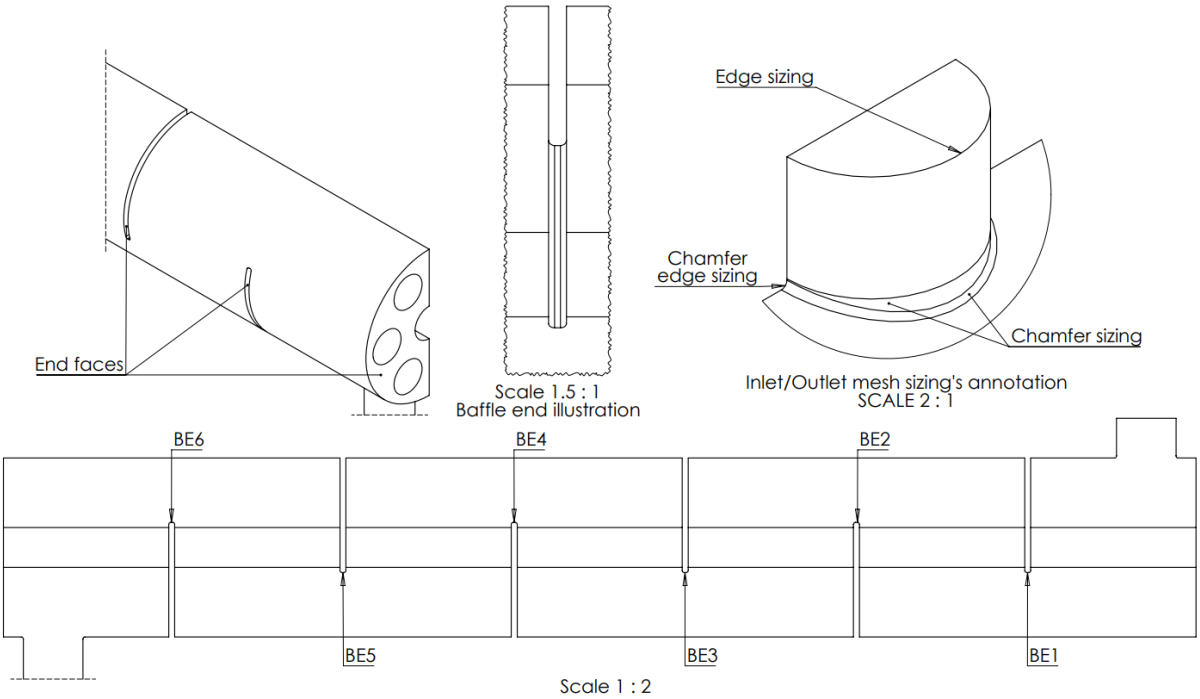

Figure 5: Illustration of the mesh sizing's

Y+ results

Table 7: Y+ results for tube and shell walls

Number of nodes (Million)	Tube walls			Shell walls		
	Avg. Y+	Max Y+	% > 5	Avg. Y+	Max Y+	% > 5
3.32	10.09	26.97	86.51	7.28	27.96	64.65
10.70	6.95	17.18	67.29	5.09	17.51	44.33
14.53	6.19	21.79	60.75	4.55	16.75	36.13
19.94	5.43	16.08	53.85	4.20	13.08	32.77
26.06	4.97	16.04	48.68	3.78	12.82	25.61

Overall heat transfer coefficient calculation method

Table 8: Calculation of overall heat transfer coefficient – Validation case 0.5kgs^{-1}

Property	Symbol	Equation	Units	Value
Input parameters				
Shell outlet temperature	T_{s2}	Input	K	381.34
Shell mass flow rate	$\dot{m}_s$	Input	kgs^{-1}	0.5
Heat transfer area	A_{ht}	Input	m^2	0.26
Specific heat				
Shell inlet temperature	T_{s1}	Input	K	300.00
Average temperature	T_a	$0.5(T_{s1}+T_{s2})$	K	340.67
Specific heat[a]	Cp	Input	Jkg^{-1}K^{-1}	4188.58
Heat transfer rate				
Shell heat transfer rate	$\dot{Q}$	Equation 2	W	170353.49
Overall heat transfer coefficient				
LMTD[b]	$\Delta T_{\ln\_v}$	Equation 7	K	104.08
Overall heat transfer coefficient[c]	U	Equation 1	Wm^{-2}K^{-1}	6294.92

[a]Expression used to relate temperature and specific heat (Appendix D)
[b]Equation uses wall temperature of 450K

Equation 1
(Holman, 2010)

$$\mathrm{U} = \frac{\dot{\mathrm{Q}}}{\mathrm{A}\Delta\mathrm{T}_{ln}}$$

Where:

$\dot{\mathrm{Q}}$ – Rate of heat transfer (W)
U – Overall heat transfer coefficient (Wm^{-2}K^{-1})
A – Heat transfer area (m^2)
$\Delta\mathrm{T}_{ln}$ – Log mean temperature difference (K)

Equation 2
(Rogers, 1992)

$$\dot{\mathrm{Q}} = \dot{\mathrm{m}}C_p\Delta\mathrm{T}$$

Where:

$\dot{\mathrm{Q}}$ – Rate of heat transfer (W)
$\dot{\mathrm{m}}$ – Mass flow rate (kgs^{-1})
C_p – Specific heat capacity at constant pressure (Jkg^{-1}K^{-1})
$\Delta\mathrm{T}$ – Temperature difference (K)

Equation 7

$$\Delta T_{\ln\_\mathrm{val}} = \frac{(T_w - T_{\mathrm{o}}) - (T_w - T_i)}{\ln\left(\frac{T_w - T_{\mathrm{o}}}{T_w - T_i}\right)}$$

Where:

$\Delta T_{\ln}$ – Log mean temperature difference (K)
T_{w} – Tube wall temperature (K)
T_o – Shell outlet temperature (K)
T_i – Shell inlet temperature (K)

Appendix D – University heat exchanger analysis

Geometry

Table 9: University heat exchanger geometry details

Symbol	Description	Unit	Value
D_{si}	Shell inside diameter	mm	50
D_{so}	Shell outside diameter	mm	60
d_{to}	Tube inside diameter	mm	4
d_{ti}	Tube outside diameter	mm	6
P_t	Pitch	mm	15
θ_{tp}	Tube characteristic layout angle	°	30
N_t	Number of tubes	N/A	7
L_s	Shell length	mm	182
L_t	Tube length	mm	198
L_b	Baffle length	mm	44.75
N_b	Number of baffles	N/A	3
t_b	Baffle thickness	mm	1
$D_{i,o}$	Inlet/Outlet diameter[a]	mm	13.5
$L_{b\_i,o}$	Length from shell edge to inlet/outlet centre	mm	10.75
L_i	Inlet length from shell centre	mm	45
L_o	Outlet length from shell centre	mm	85

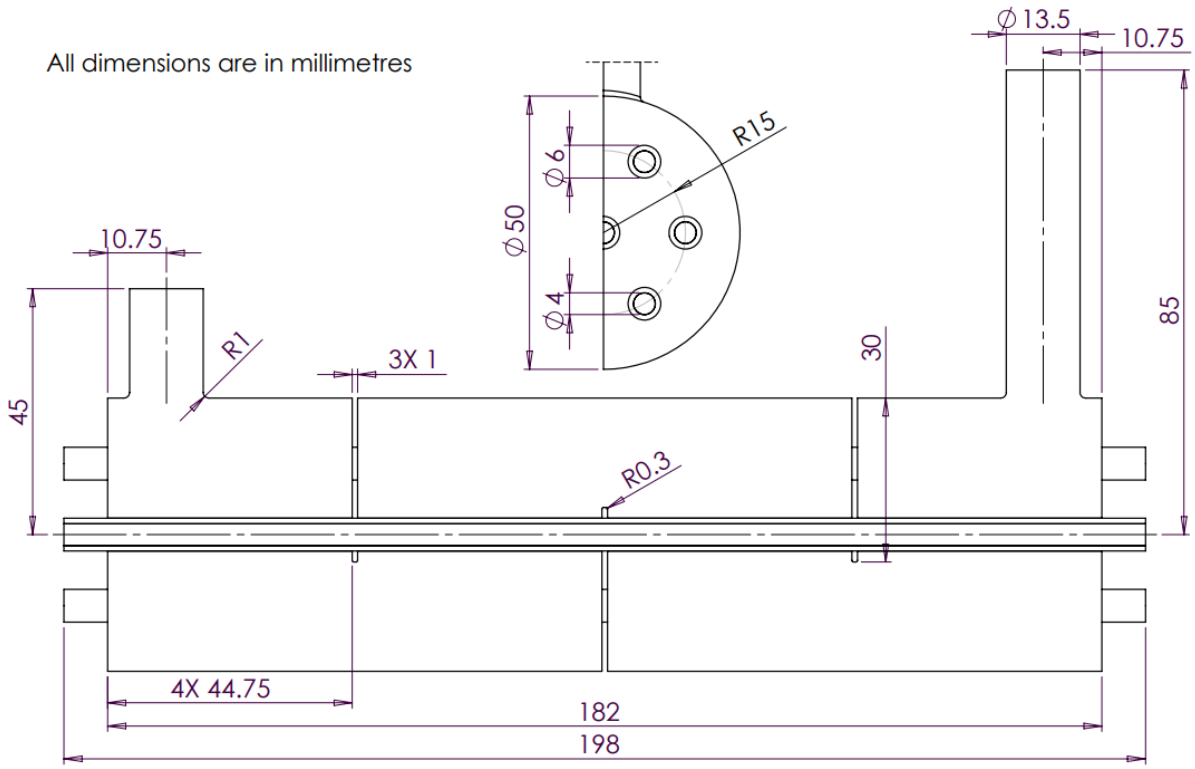

Figure 6: Illustration of the UHX geometry

Experimental method

Parallel-Flow Experiment

1. Set the UHX for parallel flow and set the heat tank temperature to 60°C
2. Set the tube flow rate to 3Lmin^{-1}
3. Start-up flow of shell water and using the hand operated flow control value, set the flow rate to 0.5Lmin^{-1}
4. Allow the system to attain a steady state. This may need at least five minutes and you may need to adjust the flow control valve slightly to keep flow rate constant
5. Record tube and shell circuit temperatures
6. Repeat the procedure for the shell flow rates of 1, 2 and 3Lmin^{-1}

Counter-Flow Experiment

1. Reconfigure the heat exchanger for counter flow and repeat the parallel-flow experimental process

Experimental results

Results from five data sets were analysed with outliers omitted allowing the average temperature profile to be determined (Table 23 and Table 24)

Table 10: Parallel-flow experiment results

Cold volumetric flow rate (Lmin^{-1})	Shell temperature (K)		Tube temperature (K)	
	Inlet	Outlet	Inlet	Outlet
0.5	286.15	302.69	332.01	329.81
1.0	286.23	297.07	331.97	329.21
2.0	285.18	292.58	331.72	327.68
3.0	285.45	291.08	331.78	327.08

Table 11: Counter-flow experiment results

Cold volumetric flow rate (Lmin^{-1})	Shell temperature (K)		Tube temperature (K)	
	Inlet	Outlet	Inlet	Outlet
0.5	285.30	302.93	332.85	330.45
1.0	285.30	296.63	331.95	328.95
2.0	285.53	292.61	331.75	327.83
3.0	285.93	291.21	331.35	326.87

CFD input parameters

Mesh settings

All standard settings are the same as the validation case. A face meshing is being used on the tube ends to promote the isothermal surfaces. The shell volume was meshed using the 14.53 million settings specified above.

Table 12: UHX mesh settings excluding face sizing's

Element size	Units	Value	Option
Overall mesh parameters			
Element size	mm	0.5	
Max size	mm	5	
Capture curvature			Yes
Tube inflations			
Maximum layers	N/A	10	
Inflation option			Smooth transition
Mesh type			All quad
Tube volume inflations			
Maximum layers	N/A	10	
Inflation option			Smooth transition
Mesh type			All tri
Edge sizing – Tubes and tube volume			
Element size	mm	0.1	

Parallel-flow input values

Table 13: UHX CFD input: Parallel-flow

	Tube inlet			Shell inlet	
Volumetric flow rate ($Lmin^{-1}$)	Inlet temp. (K)	$\dot{m}$ (kgs^{-1})	Half $\dot{m}$[a] (kgs^{-1})	Inlet temp. (K)	$\dot{m}$ (kgs^{-1})
0.5	332.01	0.00703	0.00352	286.15	0.00416
1.0	331.97	0.00703	0.00352	286.23	0.00832
2.0	331.72	0.00704	0.00352	285.18	0.01665
3.0	331.78	0.00704	0.00352	285.45	0.02497

[a] Half mass flow rate was used for the central tube volume

F.3.2 Counter-flow

Table 14: UHX CFD input: Counter-flow

	Tube inlet			Shell inlet	
Volumetric flow rate ($Lmin^{-1}$)	Inlet temp. (K)	$\dot{m}$ (kgs^{-1})	Half $\dot{m}$[a] (kgs^{-1})	Inlet temp. (K)	$\dot{m}$ (kgs^{-1})
0.5	332.85	0.00703	0.00351	285.30	0.00416
1.0	331.95	0.00703	0.00352	285.30	0.00832
2.0	331.75	0.00703	0.00352	285.53	0.01665
3.0	331.35	0.00704	0.00352	285.93	0.02497

[a] Half mass flow rate was used for the central tube volume

Stainless steel parameters

Table 15: Relevant material properties of ANSI304 stainless steel

Density (kgm^{-3})	Molar mass ($gmol^{-1}$)	Specific heat capacity ($Jkg^{-1}K^{-1}$)	Thermal conductivity ($Wm^{-1}K^{-1}$)
7740	9779.83	480	15.5

CFD temperature profile

Table 16: UHX CFD outlet temperatures: Parallel-flow

Shell volumetric flow rate ($Lmin^{-1}$)	Outlet temperature (K)			
	Shell		Tube	
	Mean	1 SD	Mean	1 SD
0.5	302.30	0.0067	328.96	0.0095
1.0	297.56	0.0710	327.68	0.0053
2.0	293.14	0.0858	325.97	0.0167
3.0	291.38	0.1068	325.14	0.0026

Table 17: UHX CFD outlet temperatures: Counter-flow

Shell volumetric flow rate ($Lmin^{-1}$)	Outlet temperature (K)			
	Shell		Tube	
	Mean	1 SD	Mean	1 SD
0.5	302.35	0.0375	329.50	0.0086
1.0	297.27	0.0622	327.39	0.0237
2.0	293.41	0.1744	325.79	0.0175
3.0	291.94	0.1453	324.69	0.0170

Overall heat transfer coefficient calculation

Table 18: Calculation of overall heat transfer coefficient – 0.5Lmin^{-1} parallel-flow, Experiment

Property	Symbol	Equation	Units	Value
Input parameters				
Tube inlet temperature	T_{t1}	Input	K	332.01
Tube outlet temperature	T_{t2}	Input	K	329.81
Average tube temperature	T_{ta}	$0.5(T_{t1}+T_{t2})$	K	330.91
Shell inlet temperature	T_{s1}	Input	K	286.15
Shell outlet temperature	T_{s2}	Input	K	302.69
Average shell temperature	T_{sa}	$0.5(T_{s1}+T_{s2})$	K	294.42
Heat transfer area	A_{ht}	Input	m^2	0.02
Thermal properties[a]				
Tube specific heat[a]	ρ_t	Input	Jkg^{-1}K^{-1}	984.32
Tube density	C_{p_t}	Input	kgm^{-3}	4184.06
Shell specific heat	ρ_s	Input	Jkg^{-1}K^{-1}	997.78
Shell density	C_{p_t}	Input	kgm^{-3}	4181.38
Mass flow rates				
Tube volumetric flow rate	$\dot{V}_t$	Input	Lmin^{-1}	3.0
Tube mass flow rate	$\dot{m}_t$	$\rho_t(\dot{V}_t/60000)$	kgs^{-1}	0.0492
Shell volumetric flow rate	$\dot{V}_s$	Input	Lmin^{-1}	0.5
Shell mass flow rate	$\dot{m}_s$	$\rho_s(\dot{V}_s/60000)$	kgs^{-1}	0.0083
Heat transfer coefficients				
Tube heat transfer rate	$\dot{Q}_t$	Equation 2	W	453.03
Shell heat transfer rate	$\dot{Q}_s$	Equation 2	W	575.05
Overall heat transfer coefficient				
LMTD	$\Delta T_{\ln}$	Equation 4[b]	K	35.67
Average heat transfer coefficient	$\dot{Q}_a$	$0.5(\dot{Q}_t+\dot{Q}_s)$	W	514.04
Overall heat transfer coefficient[c]	U	Equation 1	Wm^{-2}K^{-1}	720.05

[a]Expression used to calculate the temperature dependent variables (Appendix D)
[b]For counter-flow configuration use Equation 5