University of Plymouth

PEARL **https://pearl.plymouth.ac.uk**

04 University of Plymouth Research Theses 01 Research Theses Main Collection

1993

AN INVESTIGATION INTO PRODUCT DESIGN AND PRODUCTION TECHNIQUES WITHIN A JUST-IN-TIME MANUFACTURING ENVIRONMENT

RICHMOND, ROBIN JULIAN

http://hdl.handle.net/10026.1/1108

http://dx.doi.org/10.24382/4872
University of Plymouth

All content in PEARL is protected by copyright law. Author manuscripts are made available in accordance with publisher policies. Please cite only the published version using the details provided on the item record or document. In the absence of an open licence (e.g. Creative Commons), permissions for further reuse of content should be sought from the publisher or author.

store

AN INVESTIGATION INTO PRODUCT DESIGN AND PRODUCTION TECHNIQUES WITHIN A JUST-IN-TIME MANUFACTURING ENVIRONMENT

R. J. RICHMOND

M. Phil. 1993

REFERENCE ONLY

LIBRARY STORE

AN INVESTIGATION INTO PRODUCT DESIGN AND PRODUCTION TECHNIQUES WITHIN A JUST-IN-TIME MANUFACTURING ENVIRONMENT

BY

ROBIN JULIAN RICHMOND

A thesis submitted to the University of Plymouth
in partial fulfilment for the degree of

MASTER OF PHILOSOPHY

Department of Mechanical Engineering
Faculty of Technology
in collaboration with Tecalemit Systems Limited

LIBRARY STORE

September 1993

UNIVERSITY OF PLYMOUTH
Item No. 900 2656977
Date 17 APR 1996 T
Class No. T-658.5 RIC
Contl. No. X703260684
LIBRARY SERVICES

90 0265697 7

REFERENCE ONLY

LIBRARY STORE

This copy of the thesis has been supplied on the condition that anyone who consults it is understood to recognise that its copyright rests with the author and that no quotation from the thesis and no information derived from it may be published without the author's prior written consent.

Signed:- Robin Richmond.....

Robin Richmond

ABSTRACT

This thesis describes the implementation of a Just-in-Time (JIT) cell on a greenfield site. It concentrates on a before and after implementation situation. Various production parameters are analysed to compare flowline performance before and after the implementation of JIT.

The study is primarily concerned with the philosophies behind the Japanese management style of JIT and the practical use of JIT in a relatively small production line.

Each area of JIT and its associated components are studied and, where practical, executed into practice within the production line. The study includes an investigation of the present manufacturing system and recommends improvements to aid manufacturing output.

Total Quality Control, Set-up Reduction, Group Technology, Kanban, Failure Mode and Effects Analysis and Value Analysis are tools used to assist the formation of the JIT cell. Results taken after implementation revealed that stock levels reduced by 25%. Shop floor area was reduced by 205 square metres and lead time reduced by 33%. Large arrears in orders were virtually eliminated six weeks after implementation. Warranty claims were greatly reduced, Quality Management greatly enhanced the product and cross-training of operatives was achieved.

TABLE OF CONTENTS

		Page
	ABSTRACT	i
	LIST OF FIGURES	v
	ACKNOWLEDGEMENTS	viii
	OBJECTIVE OF THE PROJECT, PURPOSE OF THE RESEARCH AND RESEARCH METHODS	ix
CHAPTER 1	INTRODUCTION AND REVIEW OF JUST-IN-TIME METHODOLOGY	1
1.1	History of JIT	1
1.2	Philosophy behind JIT	2
1.3	Principles and techniques of JIT	3
1.3.1	Total quality control	3
1.3.2	Set-up reduction	4
1.3.3	Group Technology	6
1.3.4	Kanban	6
1.3.5	Supplier Development	8
1.3.6	Total Employee Involvement	11
1.4	Difficulties encountered with JIT	12
1.5	JIT Successes	14
1.6	Present study	15
1.7	Summary of the remaining chapters and their research structure	17
CHAPTER 2	CELL REVIEW BEFORE JIT IMPLEMENTATION	25
2.1	Introduction	25
2.2	Analysis of graphs	26
2.2.1	Average production	26
2.2.2	Average man hours per Tecreel	26
2.2.3	Average hosing up swivels and returns	26
2.2.4	Value of stock	30
2.2.5	Stock production ratio	32
2.2.6	Operation timings	32
CHAPTER 3	THE IMPLEMENTATION OF THE PRODUCTION LINE ON A GREENFIELD SITE	35
3.1	Production line layout	35
3.2	Theory behind flow of work	35
3.2.1	Functional layouts	36
3.2.2	Line layouts	36
3.2.3	Fixed Position layouts	37
3.2.4	Group Technology layout	37
3.2.5	Mixed Mode Assembly Lines	38
3.2.6	Transfer Lines	38
3.3	Key objective factors for Tecreel Cell Design	40
3.4	Cell structure after move	41
3.5	Comparison of flowline layouts	43
3.6	Balancing the Tecreel cell	48
3.7	Procedure for Industrial Removal	49
3.7.1	Selection of Industrial Remover	50
3.8	Timescale for machinery installation	50

			Page
CHAPTER 4		KANBAN AND THE ORDER TO MANUFACTURE SYSTEM ..	52
	4.1	The order to manufacture system	52
	4.1.1	Difficulties and recommendations for the MRP system	54
	4.1.2	Assessment of MRP and alternatives	56
	4.2	The Kanban system	58
	4.2.1	Implementing the Kanban system	58
	4.2.2	Resolving Kanban difficulties	61
	4.2.3	Workforce training	61
CHAPTER 5		FLOWLINE IMPROVEMENTS AND TOTAL QUALITY CONTROL	62
	5.1	Introduction	62
	5.2	Implementation of flowline improvements and suggestions from workforce	63
	5.2.1	Balancing the assembly flowline	66
	5.3	Quality and the introduction of process control	68
	5.3.1	Statistical process control (SPC) and Failure mode and effects analysis	71
	5.3.2	The implementation of quality improvements ..	73
CHAPTER 6		VALUE ANALYSIS ON THE DESIGN AND MANUFACTURE OF THE TECREEL	75
	6.1	Definition	75
	6.2	Objectives for the Value Analysis study	75
	6.3	Implementation strategy	76
	6.3.1	Feasibility study	77
	6.3.2	Design and manufacturing study	78
	6.3.3	Evaluation of the ideas generated by the VA team	79
	6.4	Combination of ideas and the reduction process	83
	6.4.1	Alternative design combinations for the Tecreel	86
	6.5	Evaluation of the alternative Tecreel designs ..	93
	6.6	Conclusions from the evaluation process	96
	6.7	Proposed implementation plan	98
	6.8	Summary	100
	6.9	Concluding remarks	101
CHAPTER 7		CELL REVIEW AFTER JIT IMPLEMENTATION PROJECT ..	102
	7.1	Introduction	102
	7.2	Analysis of graphs	103
	7.2.1	Average production	103
	7.2.2	Average man hours per Tecreel	103
	7.2.3	Average hosing up, swivels and returns	105
	7.2.4	Value of stock	107
	7.2.5	Stock production ratio	110
	7.3	Comparison of results with other JIT company implementations	112
CHAPTER 8		OVERALL CONCLUSIONS AND RECOMMENDATIONS	115
	8.1	Conclusions and recommendations	115
	8.2	Futuristic ideal implementation plan for a JIT manufacturing cell	119

		Page
	REFERENCES	122
	NOMENCLATURE	132
APPENDIX 1	A list of Tecreel components showing their card quantities and priority rating	133
APPENDIX 2	Showing the time study for the new flowline layout at Tecalemit Systems Limited	140
APPENDIX 3	Results of process FMEA on the Tecreel hub and shaft	141
APPENDIX 4	A sample statistical process control used in conjunction with the Tecreel hub machining operation	144
APPENDIX 5	Torque values for all fittings used in the assembly process and the calibration procedure for the air and hand wrenches used in Tecreel manufacture	145
APPENDIX 6	Example Job Information sheet for assembling the hub and shaft at Station 1	150
APPENDIX 7	Detailed Technical and Cost Analysis of ideas formulated during Tecreel Value Analysis, including a tentative time schedule for the VA study	151
APPENDIX 8	A pareto diagram for the 375 Tecreel TC/TR 38000	181
APPENDIX 9	Details of the Roller Burnishing operation ..	183
APPENDIX 10	A Feasibility Study into plastic design for the Tecreel	184
APPENDIX 11	Type 5 Tecreel Questionnaire and Specification for Type 5 Tecreel	202
APPENDIX 12	Submission of three publications for presentation:-	212
	Seventh National Conference on Production Research, 3-5 September 1991, Hatfield Polytechnic.	
	Sixth International Conference of Operations Management Association, 25-26 June 1991, Aston University.	
	European Simulation Multi-Conference, 17-19 June 1991, Copenhagen	

LIST OF FIGURES

Figure	Description	Page
CHAPTER 1		
1.1	Just-in-time traditional approach to productivity.	2
1.2	Improvement plan for reducing set-up time.	5
1.3	Illustrating key issues in developing supplier relationships.	9
1.4	Exploded drawing of the most popular Hosereel, the 375 Tecreel.	16
CHAPTER 2		
2.1	Graph showing Average Production rate over 2.5 years.	27
2.2	Graph showing Average Man Hours over 2.5 years.	28
2.3	Graph showing Average Hosing up, Swivels and Returns over 2.5 years.	29
2.4	Graph showing Value of Stock over 2.5 years.	31
2.5	Graph showing Value of Stock divided by the production rate over 2.5 years.	33
2.6	Operation timings for the Tecreel build.	34
CHAPTER 3		
3.1	The relationship between types of layouts.	39
3.2	Layout of Tecreel production before move.	44
3.3	Flowline layout of Tecreel Cell 375 and Type 4.	45
3.4	Flowline layout of Tecreel Cell 4 port and Multifunction.	46
3.5	Alternative flowline layout of Tecreel Cell.	47
3.6	The distribution of work in a typical flowline.	48

Figure	Description	Page
CHAPTER 4		
4.1	Describing the process for an order to manufacture with the use of the MRP system.	52
4.2	Order to manufacture system before the company merger.	53
4.3	Factory Production Note (FPN) for finished goods.	55
4.4	Typical Kanban card.	59
CHAPTER 5		
5.1	Trial Tecreel flowline layout without hose and with or without adaptors.	69
5.2	Trial Tecreel flowline assembly layout with hose and with or without adaptors and brackets.	70
CHAPTER 6		
6.1	Exploded view of the Type 4 Tecreel.	80
6.2	Hub, Shaft, Bracket and Mounting Combination Matrix.	85
6.3	Qualitative Decision Matrix.	94
6.4	The Numerative Decision Matrix.	95
CHAPTER 7		
7.1	Graph showing Average Production rate over 3.5 years.	104
7.2	Graph showing Average Man Hours over 3.5 years.	106
7.3	Graph showing Hosing Up, Swivels and Returns over 3.5 years.	108
7.4	Graph showing Value of Stock over 3.5 years.	109
7.5	Graph showing Value of Stock divided by the production rate over 3.5 years	111
7.6	Table showing results of JIT Survey by Anthony et al.	112
7.7	Table showing results of JIT Survey by Billesbach et al.	112
7.8	Table showing results of JIT Survey by Wemmerlov and Hyer.	113

Figure	Description	Page
APPENDIX 7		
A7.1	Existing hub design.	153
A7.2(a)	Design based around Type 4 with no grooves in hub.	154
A7.2(b)	Design based around Type 4 with all grooves in hub.	154
A7.3	Shaft Designs.	157
A7.4	Alternative mounting considerations.	161
A7.5	Existing bracket design.	162
A7.6	Details of various bracket designs.	164
A7.7	LM0: Existing Lansing mounting.	167
A7.8	LM1.1: Possible (New) Lansing mounting.	167
A7.9	LM1.2: Possible (New) Lansing mounting.	168
A7.10	Spring Can in identical halves.	173
APPENDIX 10		
A10.1	The effect of investing in design.	199
A10.2	The cost of new product design.	200

ACKNOWLEDGEMENTS

The candidate would like to express his sincere gratitude to his supervisors, Dr R S Burns and Mr J F Pearce for their guidance, assistance, advice and encouragement throughout the course of the work and in the preparation of this thesis.

I am grateful also to Mr P D Moate, Technical Director of Tecalemit Systems Limited, for his assistance in providing company information for this project.

Finally, I am indebted to my sister, Wendy, for typing and re-typing this thesis, and for her support during the period in which this work was completed.

Objective of the project

The objective of the project was to implement just-in-time (JIT) within a small engineering company environment.

The company was required to change production processes from their traditional type of manufacturing and implement Japanese management techniques to reduce the project unit cost.

The project will act as a pilot study for JIT implementation into other company production lines.

Purpose of the research

The purpose of the research was to assess the effectiveness through a JIT approach to production processes.

The field of research is an investigation into product design and production techniques required for JIT group technology cells.

Assessment required cell performance measurement before and after JIT implementation. The pilot project evaluation supports recommendations for future applications of JIT in a small engineering company environment.

Research Methods

Data collected during the research used the following methods:-

(i) Analysis of company records.
(ii) Interviews.
(iii) Participant Observation and Activity Recordings.
(iv) Document and Database searches.
(v) Group problem solving.
(vi) Management Presentation/Feedback.

AUTHOR'S DECLARATION

At no time during the registration for the degree of Master of Philosophy has the author been registered for any other university award.

This study was financed with sponsorship from Teaching Company Directorate and Tecalemit Systems Limited and carried out in collaboration with the University of Plymouth.

A programme of advanced study was undertaken, which included practical studies in Just-in-Time and Value Analysis and management training courses.

Relevant seminars and conferences were regularly attended, at which work was often presented. External institutions were visited for professional courses and consultation purposes, and several papers prepared for publication.

Publications

"A simulation study into manufacturing effectiveness using a Just-in-Time approach" - European Simulation Multi-Conference, 17-19 June 1991, Copenhagen.

Presentations and Conferences Attended

"A Study into Manufacturing Effectiveness using a Just-in-Time approach" - Seventh National Conference on Production Research, 3-5 September 1991, Hatfield Polytechnic.

"Improving Manufacturing Performance through the application of Just-in-Time techniques" - Sixth International Conference of Operations Management Association, 25-26 June 1991, Aston University.

Signed: Robin Rowland

Date: 17th October 94

CHAPTER 1.

INTRODUCTION AND REVIEW OF JUST-IN-TIME METHODOLOGY

1.1 History of JIT

Just-in-time (JIT) is a name for a manufacturing system employing a set of techniques to reduce unit cost and inventory and improve quality within a company. JIT gained its title in the early 1980s, after the culmination of a long line of manufacturing techniques started in the early 1900s. A moving production line was first achieved by Henry Ford at the Ford Motor Company and by Alfred Sloan at General Motors (GM). This was the beginning of that manufacturing system.

In the 1960s Messrs Eiji Toyoda and Taiichi Ohno at Toyota developed a new approach to manufacturing, this was hastened by the 'oil crisis' of the 1960s and by 1972 their new approaches started to attract attention. In the mid 1970s other companies were experimenting and adopting the new philosophical approaches. At this stage and for some time later, this was called the 'Toyota Manufacturing System'[1]. By the end of the 1970s this system had attracted the attention of the West, but only one of its elements had really filtered through. The West called it 'The Kanban system'. 'Kanban' (Japanese for card) is a pull scheduling technique that will be explained later. Kanban was rather misleading, because it was only a small part of the total system and very difficult to operate independently of a large set of other activities.

The most important fact of JIT is that it is not one technique or even a set of techniques, but an overall approach or philosophy which embraces both old and new techniques.

1.2 Philisophy behind JIT

The overall approach or philosophy of JIT is the elimination of waste, this can be defined as;

> Waste is anything that does not add value to the products or anything other than the minimum amount of equipment, materials, parts, space and workers' time which are absolutely essential[46].

This means using the minimum amount of resource in the most efficient way to make production, another part of the definition refers to added value. Once the concept of looking at the operation in terms of value-added is understood, the opportunities that JIT offers can be fully exploited.

It is quite common to find that during the life of a product, 5% of its time it is undergoing a value added process, whilst 95% of its time is picking up costs. The approach is to concentrate on the 95% waste, see Figure 1.1.

JIT approach to productivity;

To eliminate waste, focus on:-

(i) Total quality control
(ii) Total waste elimination
(iii) Enforce problem solving
(iv) Total involvement.

Traditional approach to productivity;

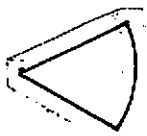

Traditional approach, focus on:-

(i) Methods improvement
(ii) Work study
(iii) Automation.

Figure 1.1 showing Just-in-Time Vs Traditional approach to productivity[2].

Another way to look at JIT is to say JIT improves the return on capital employed (ROCE) by impacting on costs inventories and fixed assets, this is shown below[1]:-

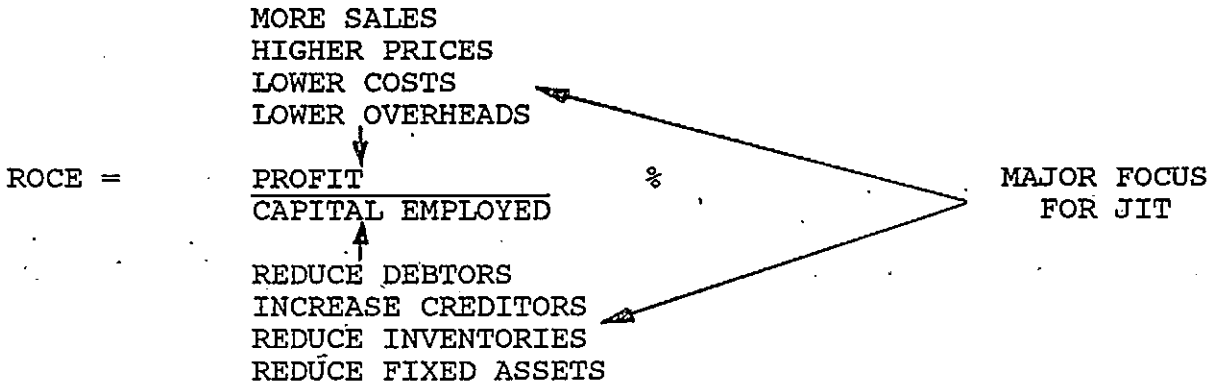

1.3 Principles and techniques of JIT

The key principles for implementation of JIT are[1];

(i) Total quality control
(ii) Batch size and set-up reduction
(iii) Group technology layouts
(iv) Kanban
(v) Supplier development
(vi) Total employee involvement.

1.3.1 Total quality control is the fundamental bedrock of JIT, the elimination of waste results in an increased need for improved quality in design, supply and processing. With high levels of work in progress and stock, companies are often unaware they even have a problem, quality when measured as a percentage of factory costs is quite often as high as 20 to 30%[3]. The need is to move away from the traditional quality inspectors and complex procedures and systems, these approaches do not add value to the product. The areas to attack in quality are[1]:-

(i) at source - raw materials and components
(ii) at design - design made right first time
(iii) in process - through process control
(iv) in people - responsibility for quality where it matters with the operators.

1.3.2 Set-up reduction

Once the need for smaller batch sizes is recognised, this will inevitably lead to more changeovers, where the focus before had been to maximise utilisation of machines and plant, usually at the cost of inventory, quality, customer service. In practice, reducing set-up times is fairly straightforward and reductions of 75%[4] are commonplace. A famous example is at the Toyota Company in Hiroshima, where the set-up time for a diesel engine bed planer was reduced, initially from four to one and a half hours and then reduced further, until finally the set-up time was brought down to three minutes[5].

Although this target may seem aggressive, it has been tested at a variety of installations over the past seven years and in many cases, companies realise an 85% to 90% reduction in machine downtime through set-up reduction.

A large share of the credit for the success at Toyota belongs to the production engineers and dedicated workforce who achieved the major reductions in setting-up times (Burbidge 1982)[6].

The modern philosophy for set-up reductions is a three phase plan of improvement, set-up time consists of 'external' and 'internal' time, where external time is defined as "time when the machine or process is traditionally stopped but could be running" and where internal time is defined as "time when the machine or process must be stopped to accomplish the set-up". The plan of improvement is shown in Figure 1.2.

Figure 1.2 showing an improvement plan for reducing set-up times.[4]

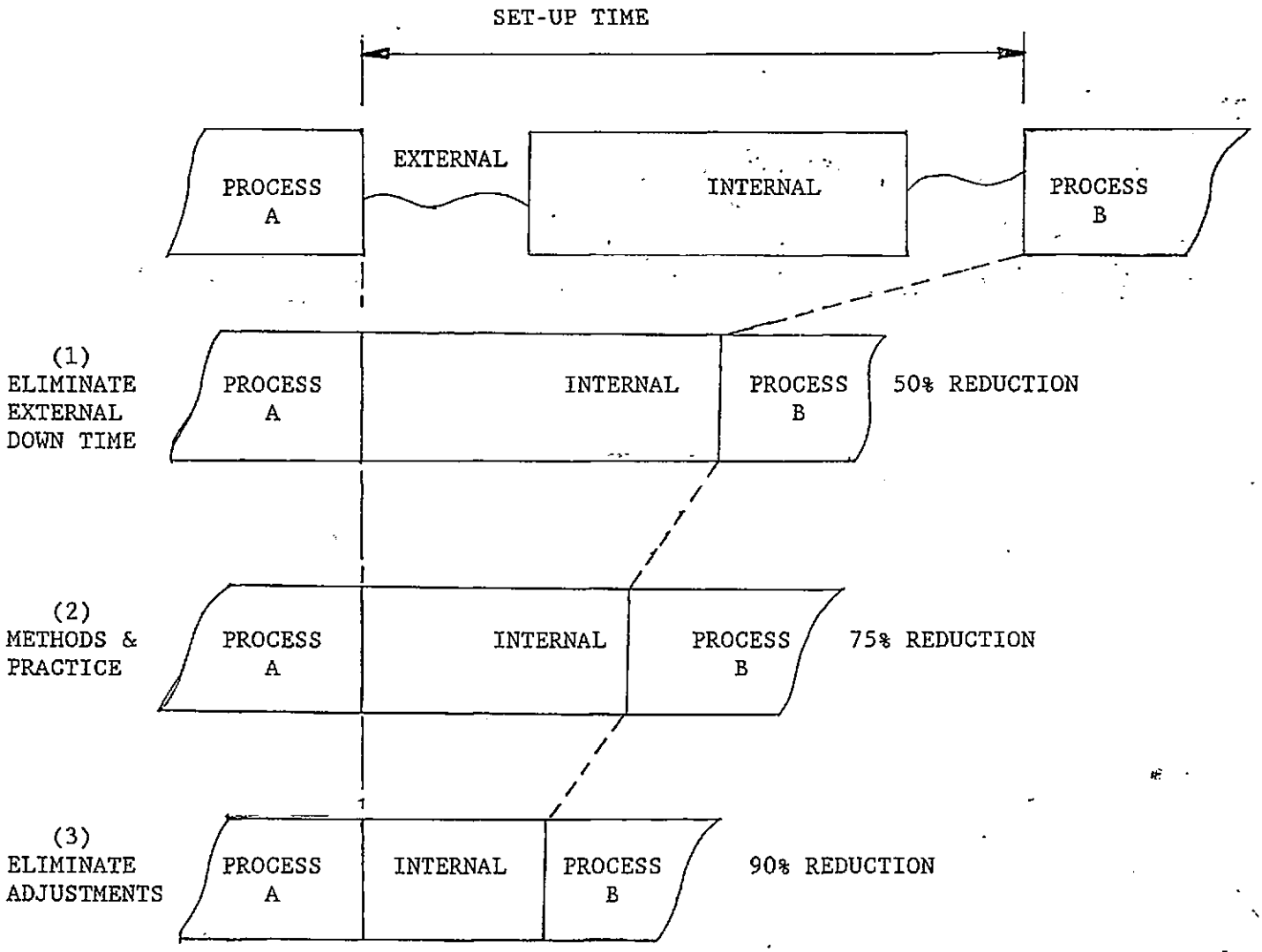

1.3.3 Group Technology

Group Technology (GT) layouts (plant or machine layouts) have become an essential foundation stone in the JIT philosophy, combined with smaller batch sizes. GT can decimate work in progress, reduce lead times and make a product much more responsive to customer demands. It is particularly relevant where a product is travelling tremendous distances on the shop floor before completion of all its operations. A case study[1] showed a product travelling two miles across a shop floor before it was finally manufactured.

The key objective when considering layouts is to determine what operations need to be together to produce a complete product or sub-assembly, then by grouping the operations by product family the shortest route to manufacture will be achieved. This layout will also form the foundation for automation if required. Specials or 'one offs', however, should use a more conventional floor layout.

1.3.4 Kanban

This pull scheduling technique is a single and effective way of planning shop floor activities. Kanban (Japanese for visual signal, usually a card) prevents unnecessary work in progress and stock by the use of a simple stocking system. Parts are supplied to the Kanban point to replenish stock, the level of stock at any stage can be reduced by remaining Kanbans so that container loads are not replaced. Equally Kanbans can be added by using an appropriate formula based on demand and throughput time.[7] Burbidge (1978) observed that one of the advantages of the Kanban system, which is highly rated in Japan, is that the workers in the factory generate their own orders and do not receive them as dictates from the office[7]. Visibility is required between stock holding points so the operator is constantly informed whether more parts are needed or not. A Kanban may not necessarily be a card, a verbal command (over an intercom or telephone, or shouted), a flag, a light or a hand signal could very well constitute a Kanban. In one case, coloured golf balls sent through by pipe were utilised to authorise production and movement of materials[8].

There are several types of Kanban:

1. The dual-card system
2. The single-card system
3. Synchro MRP
4. Micro Kanban

1. The most commonly known is the dual-card system. This utilises two cards, the withdrawal or move Kanban and the production Kanban. The withdrawal Kanban (WLK) specifies the kind and quantity of product which the subsequent process should withdraw from the preceding process, some other names used are receiving Kanban, C Kanban (conveyance Kanban) and move ticket. The production Kanban specifies the kind and quantity of the product which the preceding process must make. The WLK and production Kanbans can contain much more information than what is described above, such as time of arrival and departure, bar codes, colour schemes, operator assignments and information and authorisation signatures.

   Companies such as Toyota in Japan use a dual-card system. Nissan motor, for example, utilises a similar structure but calls it the Action Plate Method or APM[9].

2. In a single-card Kanban[10] structure only the WLK is used. Single-Card Kanban is a combination of push and a pull system. Parts are made or assembled according to a schedule, but replenishments to the work centres are authorised by more cards. Parts are pushed through production, while the work centres pull their supplies.

3. Synchro MRP, Yamaha Motors has created a structure called PY-MAC (Pan Yamaha Manufacturing Control) that combine the features of Manufacture Resource Planning (MRP) and Kanban into one system called Synchro MRP[11]. It was developed for a High-Volume manufacturing company with a broad line of products. The company prepares a master schedule (final assembly schedule), MRP is then utilised to generate work

centre production schedules equivalent to WLK and production Kanban. The Synchro cards, made specifically for each work centre, are output from a computer which also generates a daily schedule.

4. Micro Kanban is another method of combining MRP and JIT. In this case, a JIT manufacturing module (Kanban) would be added as an addition to an already installed MRP system. The MRP is used to schedule and plan the purchasing and delivery of material, a micro computer based Kanban system is then used to display the timing and number of available and required parts on the assembly line. Processed data is relayed from the central computer to the micro computer residing near or at the work centre, which then feedbacks to the main computer. The micro computer authorises production or withdrawal Kanbans as required, it would be in effect an electronic Kanban post. The computer based MRP system interacts with the micro computer and uses the information for any necessary replacing or rescheduling of operations.

Although Kanban is not used in every JIT system, some of the most successful production companies insist on its use. According to US expert, Dr R Schronberger, Kanban should be an element of a JIT system[12].

1.3.5 Supplier Development

Supplier development within a JIT environment demands that rather than just treating supplies as purely an external source of components or raw material, they should be treated as part of a process in manufacturing the product. 100% quality is expected from the suppliers and on the other hand, suppliers should expect a real and long term relationship with the company, in other words a 'partnership'. Much can be gained by involving suppliers at the design stage, but a clear understanding of the company's requirements, JIT programmes, production schedules and product specification has to be achieved.

Japanese companies tend to foster a Parent-Child relationship between vendor and manufacturer[13], a relationship based not on competition, but on lifelong association. This interdependence ensures both quality standards and delivery schedule are strictly adhered to, which is of vital importance if the 'Just in Time' rule is to be followed. In many cases the vendor company is owned by the manufacture, but operated separately. Figure 1.3 highlights some key issues in developing supplier relationships:-[1]

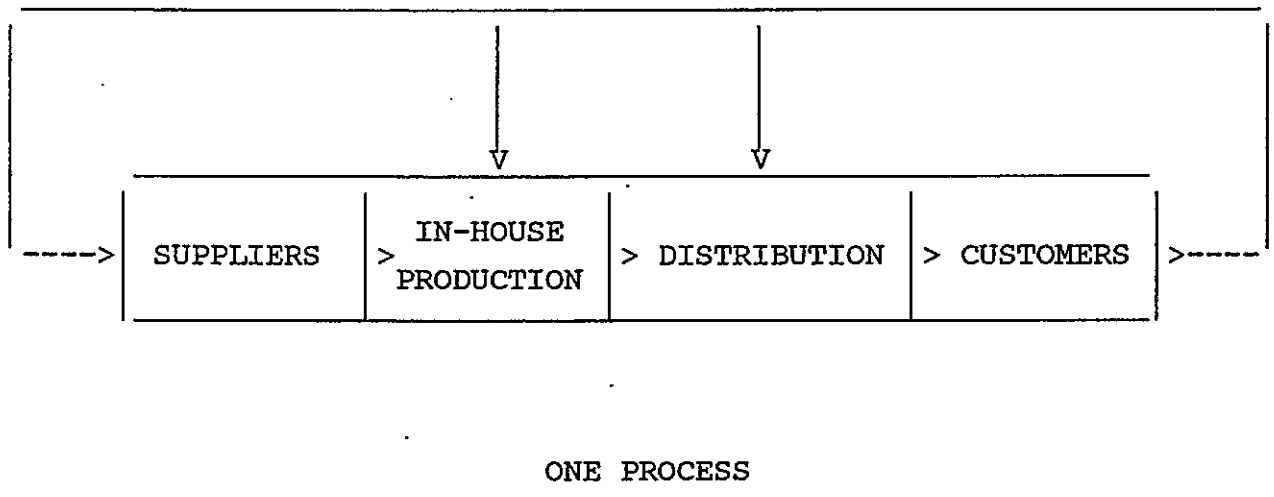

Figure 1.3 illustrating key issues in developing supplier relationships[1]

Pre-sourcing	1. Design Involvement
	2. Logistics Involvement
Partnerships	1. Small Number/Nearer
	2. Close Co-ordination
	3. Long Term Relationships
	4. On-Site Audits
	5. Quality Certified
Benefits	1. Minimise Inventory
	2. Minimise Paperwork
	3. More Frequent Reliable Deliveries
	4. Fast Feedback

The supplier must be flexible and have the capability to make and deliver parts daily, if necessary, and although geographic proximity is preferred, experience has shown that components can be transported across the United States as quickly as in Japan and products can be shipped to the United States plus or minus one day of the committed delivery date, from as far away as Taiwan and Japan[14]. Technology is now also helping companies to pass information to each other through EDI (Electronic Data Interchange), these networks provide an immediate update of schedule changes, product specification and design changes and invoicing.

1.3.6 Total Employee Involvement

Due to JIT's philosophy of continuous improvement, there is a requirement for commitment and participation by everyone. Production flexibility requires a flexible workforce which is also multi-skilled. It is necessary for a company to undertake cross-training (the need to train operators in new skills). All of these factors together require a significant change in employee and management relationships. Maintaining a successful JIT programme requires the company employees and employer to partake in the following[15]:-

(a) Extensive education/trainng
    All Levels
    All Functions

(b) Teamwork
    Across Functions
    All Levels

(c) Management Leadership
    "Top Down" Direction
    "Bottom Up" Implementation
    Provide the Opportunities
    Encourage Improvement

It is noticeable that piecework based incentive schemes are not suited to the JIT environment and, therefore, a move to group incentive schemes, value add or gainsharing schemes is the right formula. An example of people philosophy working in a JIT envirnment is at the Eaton Corporation, Watertown, USA, who manufacture electronic and Electro Mechanical control instruments and quality monitoring products[15]. Their people philosophy is shown on the next page:-

(i) Focus on the positive behaviour of employees.
(ii) Encourage employee involvement in decisions.
(iii) Communicate with employees in a timely and candid way, with emphasis on 'face to face' communications.
(iv) Compensate employees competitively, under systems which reward excellence.
(v) Provide training for organisational/individual success.
(vi) Maintain effective performance appraised.
(vii) Emphasise promotion from within the company.
(viii) Select managers and supervisors who demonstrate an appropriate blend of human relation skills and technical competence.

Finally, the famous guru W E Deming believes that 85% of production faults are the responsibility of management, not workers[16].

1.4 Difficulties encountered with JIT

JIT is not without its difficulties, such a radical change in company policies will bring its associated problems. JIT will involve new types of relationships among workers, between workers and management and between firms and their buyers and suppliers. As has happened repeatedly in the history of capitalism, such material innovations have shown practices which formerly appeared to be the acme of capitalist rationality, to be wanting[17].

The complacent belief that Japanese type customer/supplier relationships are developing nicely in Britain is sharply challenged by the independent NEDO/Training agency report, the Chairman of which is Ian Gibson - Managing Director of Nissan UK[18]. The report findings highlighted two areas:

(i) While customers identify shortcomings in their suppliers' performances, few help them to improve.
(ii) Even major firms are often minority customers with litle influence on a given supplier.

Whilst everyone wants to claim they are users of JIT Systems, this claim cannot be justified until a complete JIT Global management philosophy is implemented[19].

Diffusion of JIT by Japanese firms has been slow. One of the obvious reasons for this is that the competitive advantage in Japan derives from unique 'cultural' features and favourable relationships with the state and financial institutions. It should be noted, however, that lifetime employment is not necessarily a cultural characteristic, it was part of the concessions made by Nissan in order to buy off key workers when the unionists used western-style shop floor committees. Adoption of new JIT working practices is most likely in greenfield sites, not merely to escape traditional and militant labour, but to make a fresh start with new management[17].

Areas likely to be a cause for concern with JIT methodology are as follows[17]:

(i) As output of workers increases markedly, the effects on employment in both direct and indirect production are likely to be negative, other things (like demand) being equal.

(ii) The reduction of the 'porosity' of the working day through the elimination of idle time and the requirement of workers to switch continually between jobs, plus the internationalisation of disciplinary pressure within groups or production teams increases the intensity of work and associated stress.

(iii) The emphasis on flexibility implies multi-skilling and reduction or abolition of job descriptions. To facilitate this, if unions are allowed at all, only one union is likely to be recognised.

(iv) The need for low absenteeism and behaviourally skilled 'responsible' workers leads to very careful screening of recruits in order to ensure that they will have minimum distractions from the domestic sphere.

(v) Hierarchies within factories need to be flattened by the elimination of certain lower and middle management jobs, particularly those involved in supervision, quality control and production planning and regulation.

1.5 JIT Successes

So many successes can be quoted with JIT manufacturers, such as Toyota, Nissan, Hewlett-Packard, IBM, Lucas Industries, Cummins Engines, Xerox Computer Services UK, etc. These are but few, with improvements such as distances between consecutive machines reduced from 100m down to 2m, stock reductions of 80%, stock turnover ratios of more than 300 (Lucas Diesel Systems in Gillingham) and 40% improvement in quality, productivity increase of 50%, space reduced by 50%, lead times reduced to 30hrs from kitting to despatch (ICL manufacturing operation at Letchworth). According to Suzaki[20], Japanese car firms require a fifth of the indirect workers needed by US firms.

Successful implementation of JIT and its requisite technologies will create a manufacturing environment that can meet the competitive challenges within modern manufacturing industries around the world. JIT has proven to be an effective execution system and in combination with the planning and controls of its peripheral systems, like MRP, Optimised Production Technology (OPT), robotics and automation, can help any company increase its share in the world market. "Just in Time is the most meaningful thing that has happened since Henry Ford first tied a rope to a car and started the assembly line" - Thomas Gelb, Vice President - Operations, Harley Davidson Motor Company Inc[21].

A recent journal summed up recommendation for companies considering adopting a JIT program.[22]

"Recommendation for companies considering adopting a JIT program include:

1. Handle materials only once.
2. Establish vendor quality programs so suppliers can provide quality materials and on-time delivery in a consistent manner.
3. Build business partnerships.
4. Consider choosing only one supplier for each product needed.
5. Keep communication open and flowing.
6. Be flexible in responding to operations.
7. Determine the highest possible production rates and work to hold them."

1.6 Present Study

This present investigation concerns the implementation of a 'Just in Time' cell on a greenfield site at Estover, Plymouth. The object of the investigation was to reduce costs by inventory control, flowline organisation, improved workforce training and Value Analysis. The product quality was also to be improved with the implementation of a Total Quality Management (TQM) program. The study focused upon 'before' and 'after' results.

The product concerned is called a 'Tecreel', this is basically a hydraulic hose reel for the transfer of fluid power up to nine metres. The Tecreel is designed to eliminate slack or trailing hoses in installations where continuous variations in length are required. Its usage covers a wide variety of applications, such as attachment to cranes and trucks and more commonly forklift trucks to power the functions of the vehicle, such as side shift and tilt mechanisms. An exploded view of the most popular Tecreel can be seen in Figure 1.4. Swivels are an associated product with Tecreel and allow the transfer of hydraulic fluid from a fixed point to a moving point, this alleviates the problems of hose ends being damaged by excessive travel between fixed and movable points. The product turnover is £1.6 million/annum of which swivels represent 14%. The manufacture consists of two areas, a machine shop and assembly area, both dedicated to the manufacture of Tecreel and swivels. It should be noted that this thesis is not an investigation into the human and psychological aspects of JIT.

FIGURE 1.4

An exploded drawing of the most popular Hosereel, the 375 Tecreel

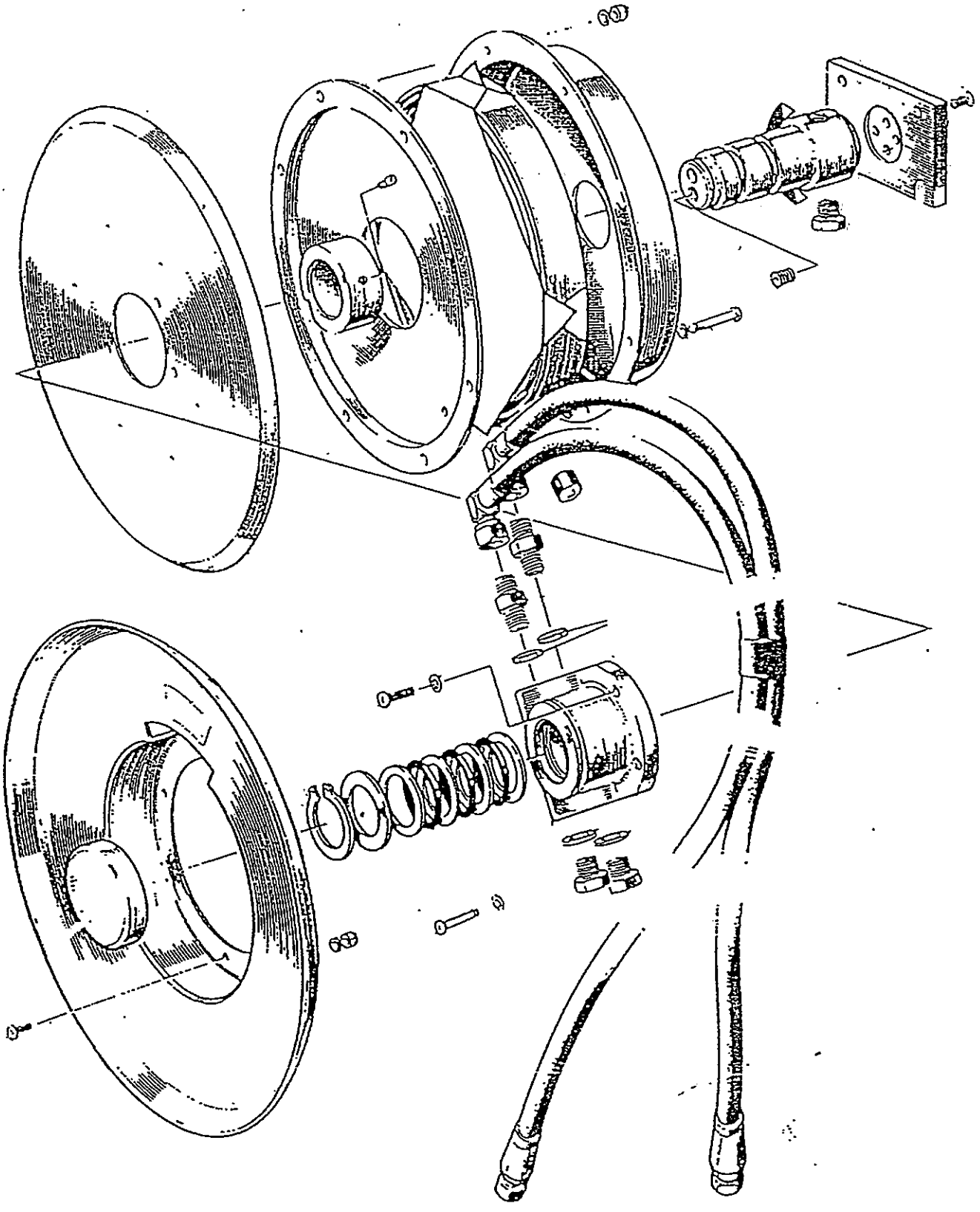

1.7 Summary of the remaining chapters and their research structure

Chapter 2 investigates the cell performance before JIT implementation. The performance indicators are assessed before the plant move, examining areas such as productivity, man hours, stock levels, operation times etc.

Research Process:-
The results collated in Chapter 2 establish benchmarks with which to compare future performance. The chapter identifies the cell's initial starting conditions, without which any future improvements would be meaningless, as there would be no base to enable assessment of progress. Kaplan 1983[23] recognised that a comprehensive set of performance measurements is necessary to both guide JIT implementation and to assess JIT system success. He suggested these should include measures of:

- quality
- inventory
- productivity
- flexibility
- innovation.

Company records, operatives' time recordings and all available historical company data was recorded and analysed to enable the formation of the thesis basis.

The company suffered from poor management information systems and the project offered only a two-year window from start to completion. Coupled with this, the management exhibited a traditional authoritarian style and had not developed the information systems required for JIT. Hendricks 1994[24] suggests a team approach is required to implement a new performance measurement system. Clarke and Mia 1993[25] concluded from a survey of 89 companies that JIT requires a comprehensive set of performance measurements to be developed. Implementation of JIT demands a change in many areas of the company, but the management were not prepared to alter their approach to some areas, e.g. the Accounting Information System (AIS). Such changes have been researched by Bhimani and Bromwich 1991[26] and Foster and Horgren 1988[27].

Chapter 3 deals with the theory behind the flow of work, interaction between the manufacturing areas, production layout drawings, together with cost of plant installation.

Research Process:-
The initial stage in cell formation required the analysis of alternative group technology cell type layouts for presentation to management. Dear 1988[28] expects such decision responsibility at management level.

Flowline layout was demonstrated using scale cut-outs to achieve the best practical solution, Everett, Ebert and Adams 1978[29]. Best practice was observed through training from professional courses (PERA)[30] and group problem solving.

The use of Group Technology provided an essential element of JIT system, Hyer and Wemmerlov 1984 - 20 company survey[31]. Fine details were discussed with both management and operatives throughout the research, such as Kanban container visibility, work bench arrangement, ventilation, COSHH regulations and physical constraints to accomplish best practice.

The U-shaped cell layout was considered better for worker interactions and to reduce material handling, reflecting the findings of Mondon 1983[32], Heiko 1989[33], Ohno 1988[34].

One shortcoming proved to be restricted timescales allowed by management for research into flowline analysis techniques, such as the benefits of computer simulation methodology, Ebrahimpour 1985[35], Schroer 1985[36], Fellers 1984[37], Shriber 1974[38]. Solutions were assessed very much on future payback period only, Bessant 1991[39], Wheeler 1988[40].

Also, many departments that could have offered valuable advice at the stage in the implementation of JIT were too busy firefighting day to day problems, Flapper, Mittenburg and Wynguard 1991[41].

Chapter 4 is concerned with the Kanban 2 card system and the conversion from the Materials Requirement Planning system of inventory control, shop loading Kanban storage control and fine tuning of the Kanban system itself.

Research Process:-
Schronberger 1982[12] stated that Kanban should be an element of a JIT system. The company's transference from their outdated MRP represented one of the most radical changes during the implementation of JIT. The decision to change was supported by many studies, the results of which have shown Kanban to be a powerful production control system, Singh et al (1990)[42].

Research proved a minefield of alternatives for low inventory stocking systems involving Kanban. The most common of which is the "production Kanban" and "Withdrawal Kanban", Mondon 1981[43]. The selected two card system, together with the ABC priority rating, was already proven in other companies, Willis et al 1990[44]. The system had already been tried and tested successfully on the new site and was popular with management, it therefore provided a logical choice.

Best practice was observed through professional course guidance (PERA)[30], emphasis was placed on an organised, clearly marked location layout, Ribar 1990[45].

Analysis of the last three years of sales provided the required information for initial estimates of Kanban quantities. Management preferred a low risk/cost option which fell far short of Toyota's recommended container capacity, Sugimori et al 1977[46].

Kanban presented a radical philosophical change for Tecreel stores and the most apparent change during the implementation of JIT, with emphasis changed from the previous push system to that required for JIT; the pull system, Karmarka 1989[47] and Boccard 1990[48].

The reduction in storage area equivalent to 25% was in line with expectations of an average company adopting JIT, Hay 1984[49]. The system once up and running offered immediate result feedback, enabling production control to fine tune the Kanban quantities.

The company, in line with many contemporaries, sought to implement the system purely from the engineering side, neglecting attention to the people aspect, Schronberger (1986)[50] and Hall 1987[51]. The company also failed to address the key issue of changed attitudes towards supply contracts essential for the smooth operation of JIT, Harrison and Voss 1990[52].

Chapter 5 discusses the flowline improvements, work in progress control, production methods, operation cycle timings and the effect of product variations. This chapter also explains the principle of Total Quality Management (TQM) and how these techniques were used in the Tecreel Cell. It also discusses quality control (TQC) techniques, such as statistical process control (SPC) and Failure Mode Effect Analysis (FMEA) and their implementation in the Tecreel section.

Research Process:-

The original product flowline failed to demonstrate evenly-balanced workstations. It was essential to balance the flowline to achieve an effective pull type system, without the detrimental effects of bottlenecks. Research has accepted the important practical implications of flowline balancing in a JIT environment, Luss et al 1990[53] and Buxley et al 1973[54].

To assist the flowline balancing process, results were recorded and analysed from time studies conducted on workstations throughout the Tecreel process.

This chapter covered a variety of techniques well used within the JIT environment, these included;

(i) Group problem solving to offer solutions to the everyday difficulties encountered throughout the production process. Analysis centred around the recommendations of the staff who experience the impact of the decision themselves, a view strongly supported by Drucker 1985[55]. The collation of information required considerable teamwork/group orientated effort, a very common development in the process of JIT/TQC implementation; Sang et al 1984[56], Suzaki 1987[57], Hall 1987[51], Cole 1980[58].

(ii) (TQM) techniques, such as (SPC), a widely used method of operator based quality management within the JIT environment, Schronberger and Knod 1988[59].

(iii) Cross training of workforce provided an important aspect to help achieve the flowline balancing, such multi-skilling of workforce proved important to the progress of JIT at Toyota, Klein 1989[60]. The benefits of this flexible type workforce have been researched by many; Sang et al 1984[56], Suzaki 1987[57], Schronberger 1982[61].

Unfortunately, some of the improvements documented within this chapter have not been implemented, as so much is judged on its immediate effect on costs, Bessant 1991[39].

Chapter 6 analyses "Value Analysis" (VA) techniques and how these were applied, both in the design and manufacture of the Tecreel, cost control methods, VA teams and their function and recommendations.

Research Process:-

Value Analysis provided another area within the 'elimination of waste' philosophy, this technique is complimentary to JIT and is positively discussed as part of JIT purchasing by Schronberger et al 1983[62]. Intensive application of worker-involvement programmes incorporating problem-solving techniques within the JIT environment was also promoted by Challis 1990[18].

VA concentrates on the removal of unnecessary cost of "anything that does not add value to the product" Sugimori et al 1977[46], it also simplified production in some areas in a manner that JIT failed to identify.

The application of VA assisted the company's management information systems, providing analysis of individual product cost. The lack of this data is suggested as one of the major criticisms of conventional cost accounting within the JIT environment, Johnson and Kaplan 1987[63].

As with the FMEA programme, the author chaired a selected team to follow conceptual ideas through to implementation. The company was beset with a 'traditional' style management which much preferred a long-established waste elimination technique. VA was used, therefore, in preference to a continual improvement programme which requires considerably more continued management commitment than was evident in the case of Tecreel. The philosophy of continual improvement implicitly requires constant review of the business performance, Hall 1987[51] and considerable management commitment, Bonito 1990[64]. Hay 1990[65] suggested that continuous improvement within the JIT environment is one of the most difficult tasks to implement.

Chapter 7 investigates the cell performance, after JIT implementation, the recording of progress through time, comparing the new cell with the old one and the performance measurements, such as productivity, man hours, stock levels etc. and the final assessment for overall conclusions and recommendations in Chapter 8.

Research Process:-
The results summarised in this chapter assess the overall achievements for the project. Whilst Chapter 2 identified the starting conditions for the cells implementation, Chapter 7 identifies achievements at the final stage of this report.

The research analyses the results of JIT implementation, enabling the establishment of performance evaluation goals essential for future JIT performance assessment, Helms et al 1990[66]. Scott et al 1993[67] stressed the importance of providing a quantitative means by which to monitor all future achievements. Research conducted by Oliver 1990[68] into the importance of performance measurement under JIT stated how it provides clear signals on progress (or lack of it) towards a goal.

Green 1993[69] recomended key measures of cost, time and product for control of future business objectives, these parameters were quantified within the performance measures.

Research required the analysis of company records and all available historical company data, whilst ensuring that the measurement parameters correlated with those of Chapter 2. Graphs were extrapolated to account for achievements relative with time throughout the implementation of JIT.

Final analysis of this chapter compared the project results with the industrial medium. Three research studies were reviewed; Anthony et al 1993[70], Billesbach et al 1991[71] and Wemmerlov and Hyer 1989[72], the data covered over 290 replies from over 1,900 questionnaire enquiries sent to UK and US companies implementing JIT.

The results of this study should be reviewed with the relatively short project timescale taken into consideration. Further years are expected to reveal considerable improvements as systems are refined, as in the case of Toyota, where the JIT programme has now been in operation for 25 years and is still being continually refined, Mondon 1983[32].

Chapter 8 describes overall conclusions and recommendations of the project. It also studies critical areas and timescales for ideal JIT implementation and the project benefits for the company.

Research Process:-

Analysing the results compiled in the previous chapter, this chapter draws overall conclusions and recommendations for the project. The project produced an overall net benefit for the organisation, with considerable potential for further improvements, this is in line with other companies implementing JIT. A survey representing 1035 US manufacturers reported that 86.4% indicated an overall net benefit resulting from implementation of JIT, White 1993[73].

Vastag et al 1993[74] sugested one of the chief benefits of JIT implementation would be reduced raw materials, this was found to apply in the case of Tecreels where there was also a reduction in inventory of bought out components and sub-assemblies.

From the results a seven point ideal implementation plan was formed for similar organisations investing in a JIT manufacturing cell. The project may also provide data for research into validation for 'expert' systems researching JIT implementation, such a case has been well documented; Bicheno 1991[75].

CHAPTER 2

CELL REVIEW BEFORE JIT IMPLEMENTATION

2.1 Introduction

For the purpose of assessing improvements to the cell, some type of performance indicators would be needed before and after JIT implementation.

By averaging the cell performance in graph form, a direct visual comparison can be made between the two sets of data. Cell review after JIT implementation can be seen in Chapter 7.

Six parameters were measured, these were:-

(i) Average production rate (see Figure 2.1)
(ii) Average man hours per Tecreel (see figure 2.2)
(iii) Average hosing up, swivels and returns (see Figure 2.3)
(iv) Average value of stock (see Figure 2.4)
(v) Average stock per production ratio (see Figure 2.5)
(vi) Operation timings (see figure 2.6)

All graphs were averaged over three or six periods. Each year consists of thirteen equal periods, the working days within a period varies from thirteen to twenty, depending on holidays. For the purpose of data correlation all periods have been adjusted to represent twenty working days.

Data collection was achieved by analysing account costing data and direct labour analysis reports in the case of parameters (i) to (v). Operation timings (parameter (vi)) were obtained by introducing a time sheet system for the Tecreel workforce.

2.2 Analysis of graphs

2.2.1 Average production

Average production rate (see Figure 2.1) was taken over two and a half years, the three period monthly average being represented by the blocked line and the six period monthly average being represented by the single line. The total Tecreel build represents all the variations of Tecreels built over that period. The results show a surprisingly fairly static production rate levelling off at about 850 Tecreels per period, this type of static production considerably eases long term planning. This static production represents a constant level of demand from the suppliers. No seasonal trend could be found.

2.2.2 Average man hours per Tecreel

Average man hours (see figure 2.2) was again taken over two and a half years, the three period monthly average being represented by the blocked line and the six period monthly average being represented by the single line. The data was collected using clocked hours for the Tecreel section, i.e. total attendance hours, and dividing this by the total number of Tecreels produced. The data indicated a reasonably constant level of between 90 and 102 minutes per Tecreel. No seasonal trend could be found.

2.2.3 Average hosing up, swivels and returns

Average hosing up, swivels and returns (see Figure 2.3) was analysed, together with the production data, because all three areas will have an effect upon the production rate and consequently the man hours.

(i) The hosing up operation was completed on Tecreels requiring hoses, this was dependent on customers' choice and would require an additional 10 minutes on a Tecreel build.

(ii) Swivels were manufactured in the Tecreel cell again as an additional product in the tecreel range. Customers would order swivels depending on forklift manufacturers' instructions.

(iii) Returns were returned Tecreels either for warranty claims or for repair. On average a warranty repair would take 40 minutes.

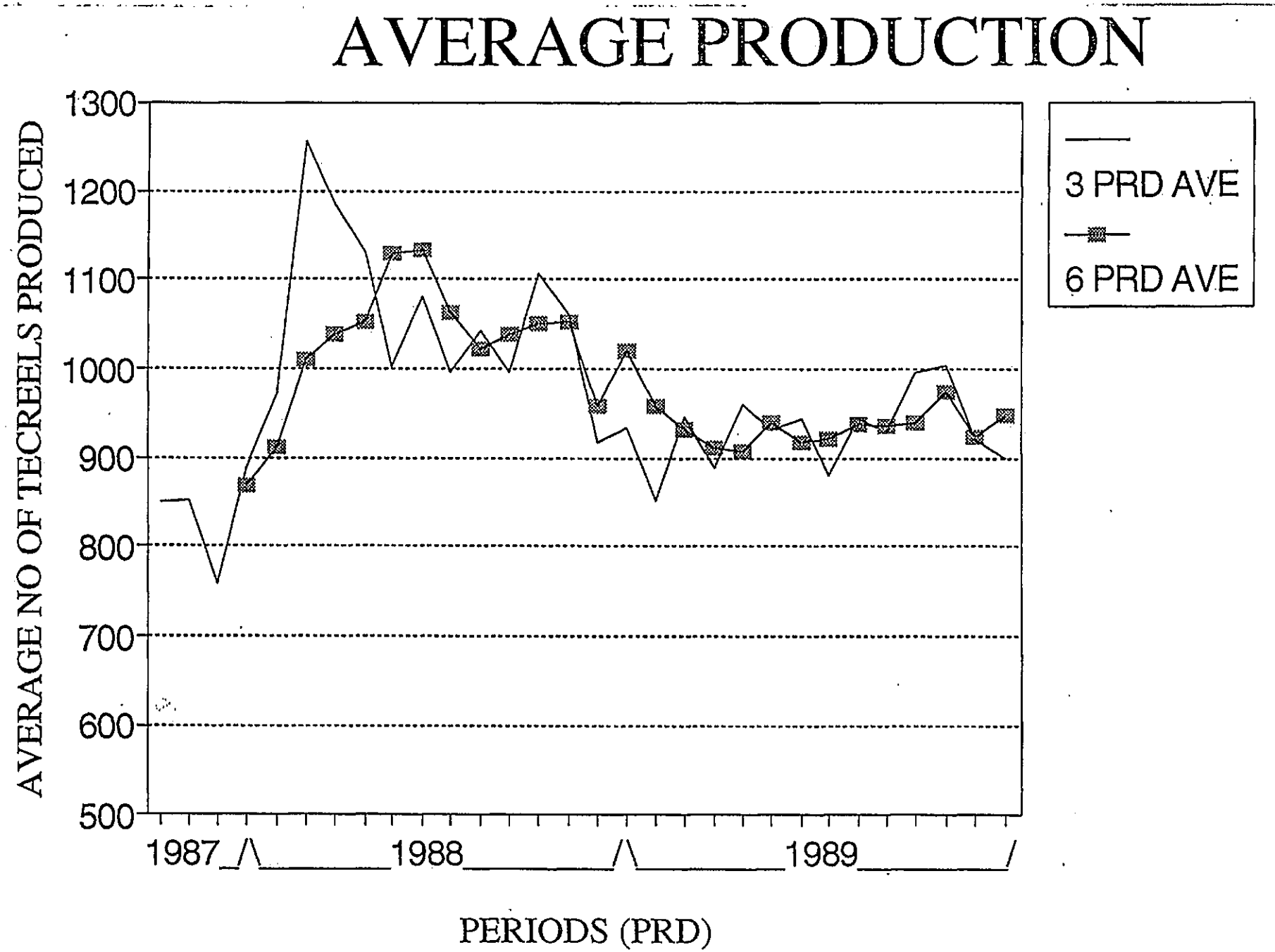

FIGURE 2.1
Showing average production rate over 2.5 years

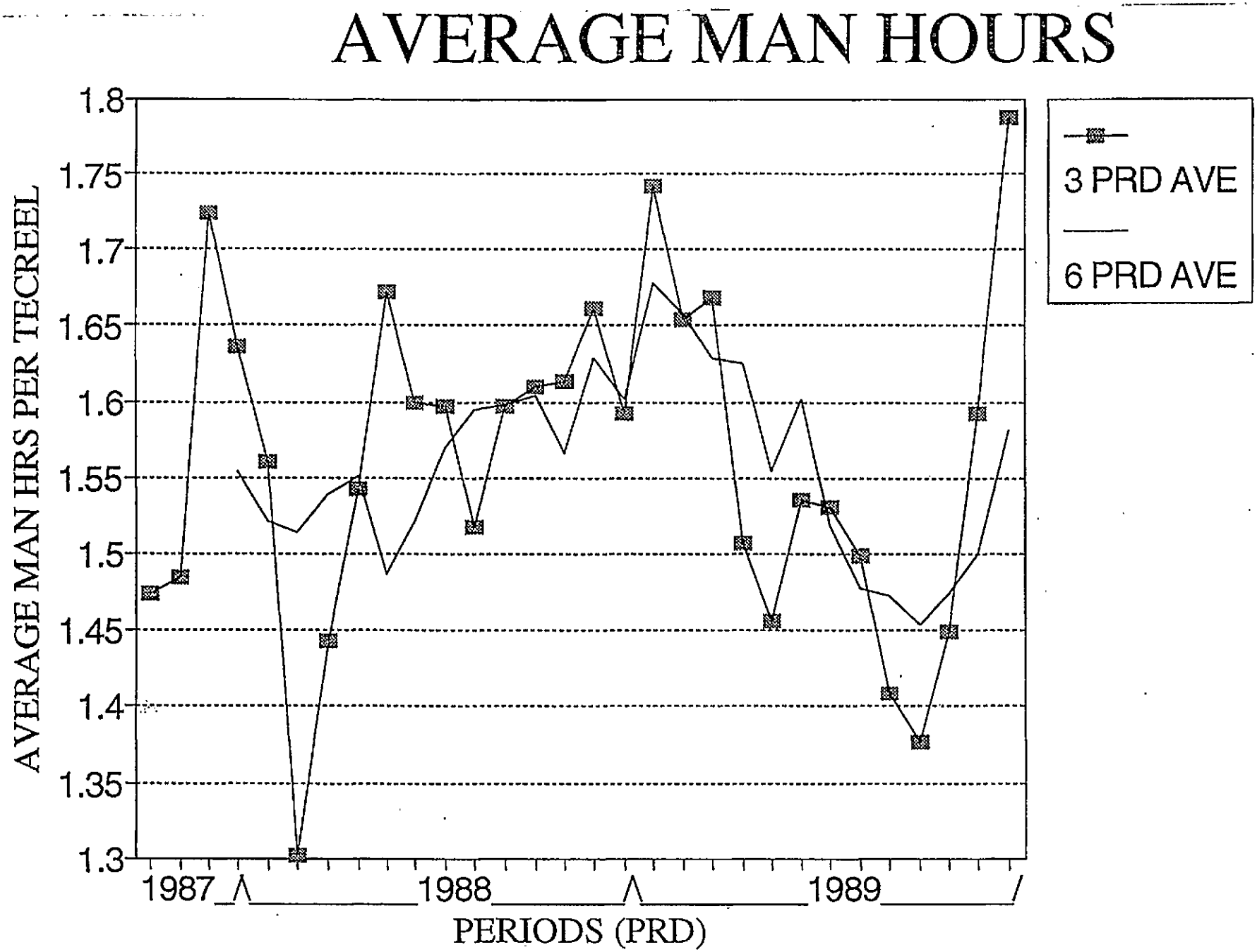

FIGURE 2.2
Showing the average man hours over 2.5 years

FIGURE 2.3

Showing average hosing up, swivels and returns over 2.5 years

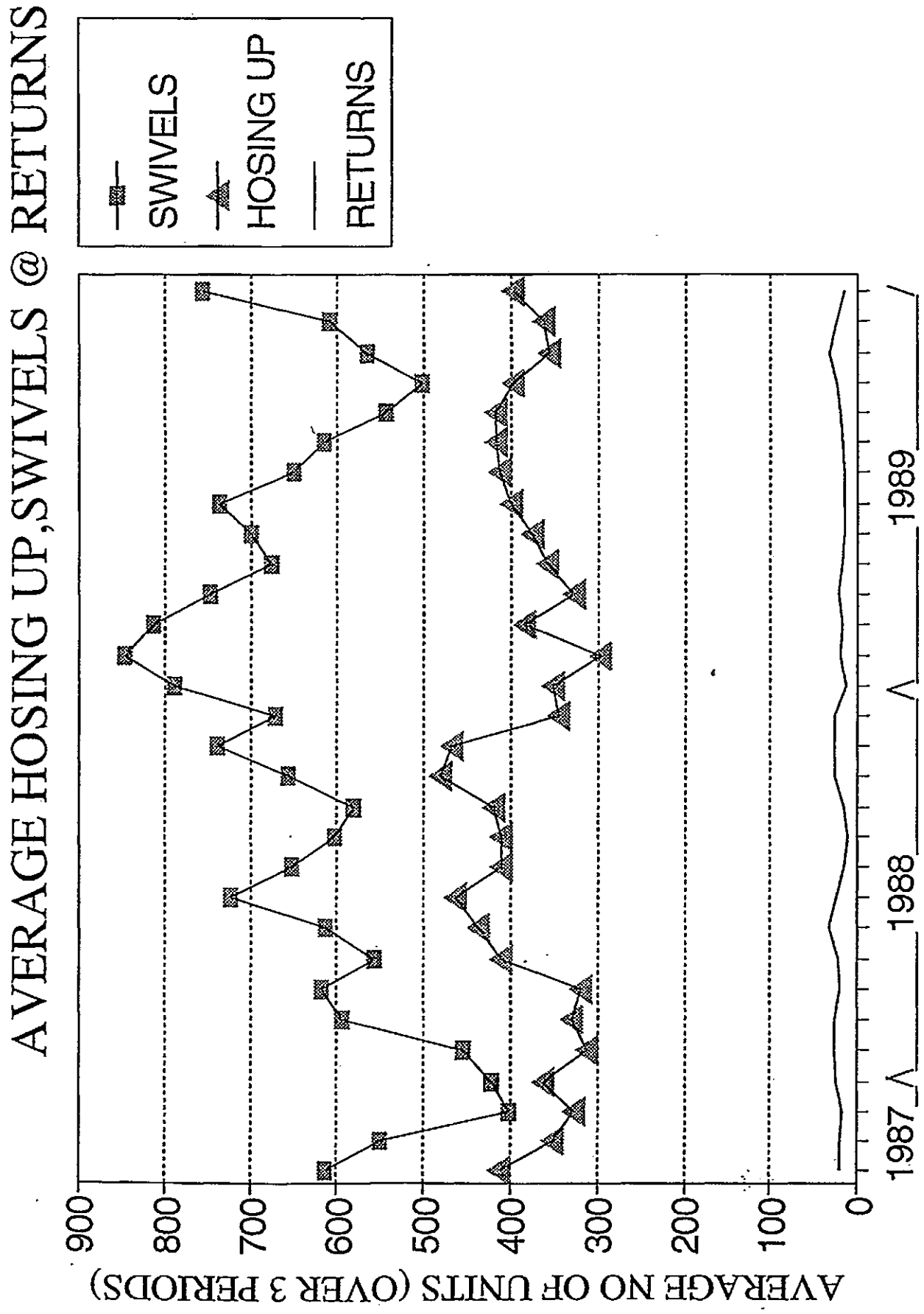

The blocked line represents the build of swivels, the triangular line represents hosing up and the solid line represents returns. All data was averaged over three periods.

Swivel build was relatively turbulent, ranging from 400 to 880 per period, hosing up on the other hand remained reasonably stable, varying from 300 to 480 per period. Returns showed a fairly static trend, averaging approximately 18 per period.

Because the timing for swivels could vary enormously, due to the type of swivel being manufactured and swivel types were usually manufactured in batches, it would have been incorrect to deduct an average swivel build time from the total time to manufacture Tecreels and swivels.

2.2.4 Value of stock

Average value of stock (see figure 2.4) was evaluated using stock value at standard cost, reports issued by the accounts department for management control purposes. This data was obtained from the Materials Requirement Planning system which deducted the Tecreels manufactured in the period from the total Tecreel component stock, thus leaving the cost of all remaining stock and part built Tecreels. The graph data has been averaged on a three period basis.

The cost of stock peaked at over £168k before a stock reduction program (started period 13, 1989) and reduced to approximately £118k in 1990. The stock reduction program, Stage 1, was accomplished by lowering order quantities on high expense items and using existing stock for Tecreel build. Stage 2 of the program concerns the use of Kanban (see Chapter 4) and the results for this can be seen in the final chapter.

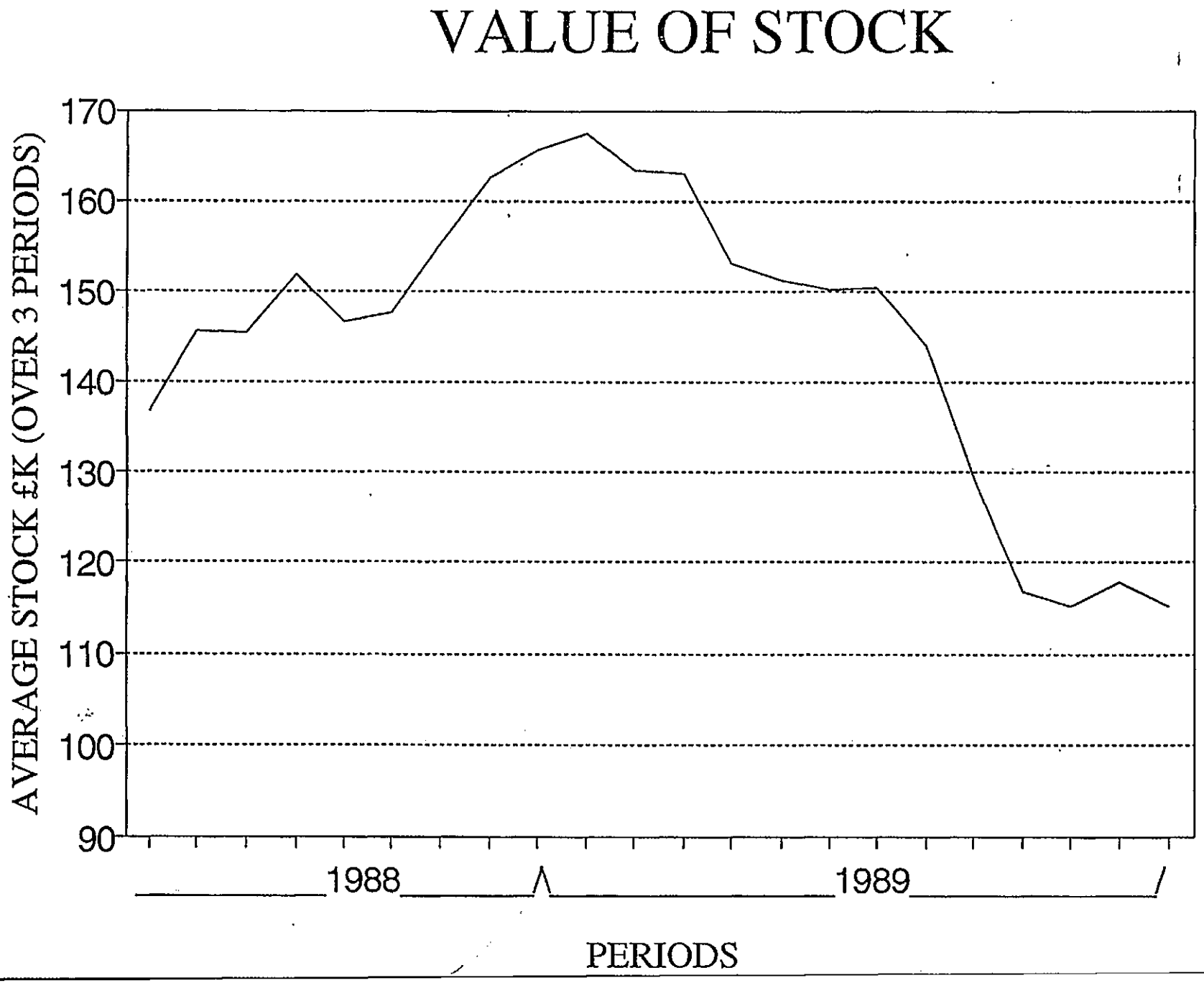

FIGURE 2.4
Showing average value of stock over 2.5 years

2.2.5 Stock production ratio

For the purpose of representing an accurate cost of stock relative to the production rate, a 'stock production ratio graph' was constructed (see Figure 2.5). This was represented by dividing an average three monthly stock cost by an average three monthly production rate. Whilst this type of graph is more often represented by stock turns, i.e. Total cost of stock/Total sales, this can be misleading due to gross margins on sales varying, therefore altering the true perception of a stock/sales ratio.

A high ratio represents a poor trend, whilst a low represents a good trend. The graph showed trends very similar to cost of stock graph (see Figure 2.4). The graph peaked at 196 at period 12, 1989 but showed a positive trend falling to approximately 128 by 1990.

2.2.6 Operation timings

The operation timings (see Figure 2.6) show the times for the various operations during the Tecreel build. 'Layout time' represents displayed computer times obtained from the Materials Requirement Planning System. These operation times had been obtained from a time and method study some 12 years previous. 'Estimated mean time per op' represents times recorded from operatives, each operator was issued with a card to record their individual times for each operation. The mean time per operation was calculated by dividing the total time for the particular operation by the number of samples taken ('Sample size'). The 'percentage variation' shows the difference between the largest and smallest time for each sample, relative to the man time. The large variances in timings were likely to be caused by small batch jobs or one-offs and operatives being taken off to complete other jobs whilst working on the batch.

No record was found as to the date the layout times were recorded, it must therefore be assumed that some of these times may be incorrect.

FIGURE 2.5

Showing the value of stock divided by the production rate over 2.5 years

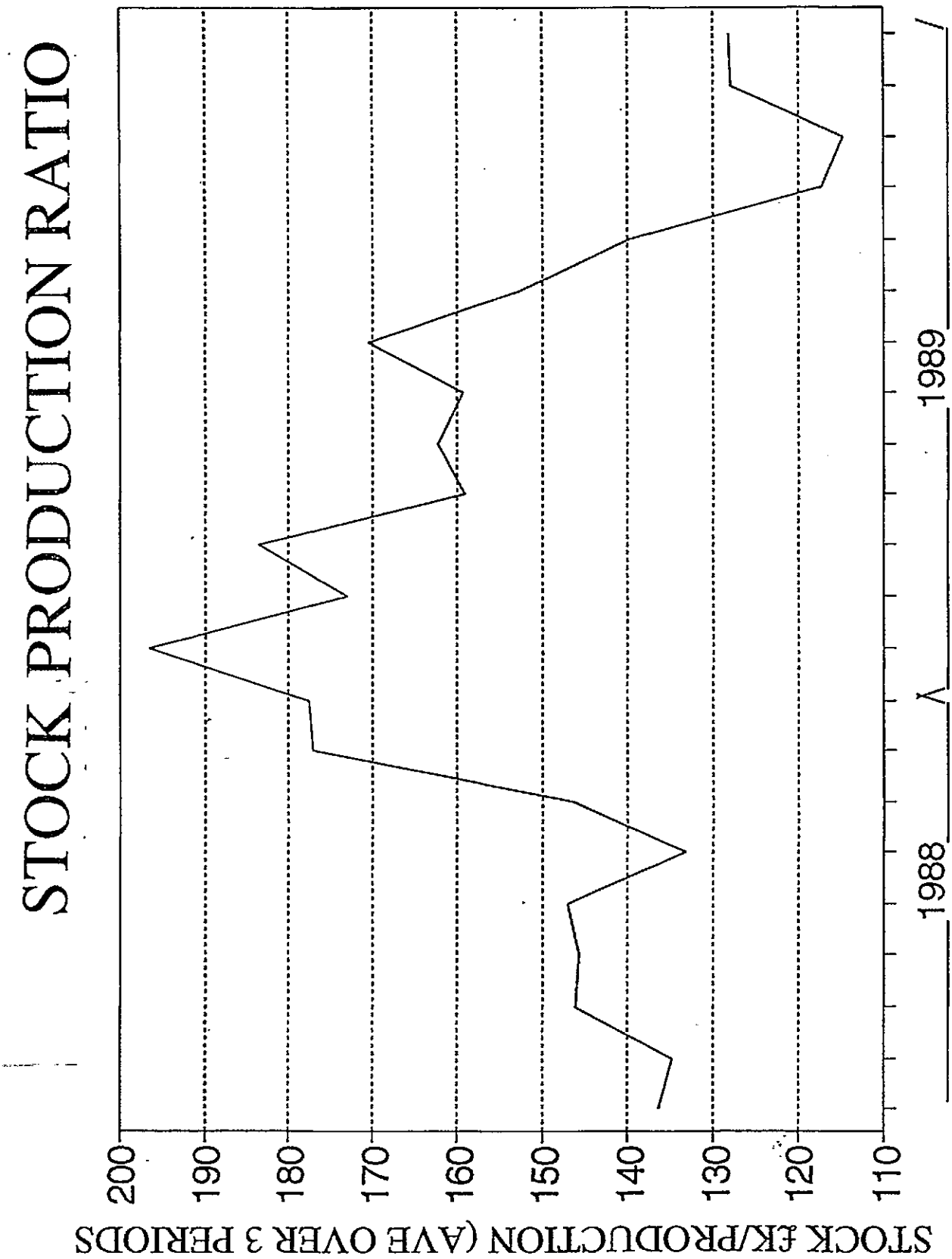

FIGURE 2.6

Showing operation timings for the Tecreel build

OPERATION TIMINGS

OPERATION	LAYOUT TIME min	SAMPLE SIZE	ESTIMATED MEAN TIME PER OP min	VARIATION %	
HUB & SHAFT ASSY & TEST	15.25	317	10.41	+56	-40
SPRING BUILD	2.91	547	3.78	+76	-50
DEGREASE & SHOTBLAST	1.6 Shotblast only	363	1.88	+103	-47
SPOT & PROJECTION WELD NUT & STUD	5.6	205	3.84	+82	-35
SPRING & CASSETTE	2.06	259	1.22	+69	-18
BUILDING UP	12	780	13.57	+91	-30
SPRAYING					
Flanges	4.5	245	5.6	+44	-10
Drums	4.5	344	5.3	+40	-62
Spring Can	4.5	359	3.42	+12	-22
Hubs, Brackets & Shafts	1.58	315	1.6	+56	-58
HOSING UP	9.3	91	10.05	+79	-44
BOXING UP		541	3.64	+18	-73
SWIVELS	14.5	415	11.13	+62	-8

The sum of the total operation timings amounts to 76 minutes, the variation with the earlier 'man hour per Tecreel' time 90-102 minutes can be attributed to material handling time.

CHAPTER 3

THE IMPLEMENTATION OF THE PRODUCTION LINE ON A GREENFIELD SITE

3.1 Production Line Layout

The Tecreel section originally situated at Tecamec "Marsh Mills" site was required to be moved from this site to Interlube, Estover Site where a space had been made available for the new production line. The two companies were later to merge (November 1990) - under the name of 'Tecalemit Systems'. For minimum disruption to Tecreel's production schedule, the production line needed to be installed during a two week period to coincide with the summer factory shutdown (27 July - 13 August).

The production layout before the move was representative of traditional production layouts, with the machine shop separated from all other production areas and machines grouped together according to their function. The stores also were kept separate from production and components moved excessive distances between operations. Work in progress stocks were high and the packing boxes were stored on a mezzanine floor in the factory.

3.2 Theory behind Flow of Work

Many types of models are used in layout planning. Managers often use mathematical analysis to help conceptualise the problem. Computer models can provide quick approximations of good layouts and physical models (such as templates and scale models, among others) can help visualise the main physical aspects of layouts.

Perhaps the most common layout technique is the use of templates, two dimensional cutouts of equipment drawn to scale. These cutouts are moved about by trial and error within a scaled model of the walls and columns of the facility[29]. This technique can be used for many types of layout, such as batch,

line, group and fixed. Similarly, micro-computer graphics are available and can visually display tentative layouts on a visual display unit.

A two-dimensional layout of the Tecreel area was used in the Tecalemit case. Scaled cardboard cutouts of all the machinery were arranged within a scaled layout of the factory floor. The following summaries of production layouts and lines are described by Terry Hill (1989)[84].

3.2.1 Functional Layouts (also known as "Process" or "Batch" Layouts)
Functional orientated layouts are appropriate when workflows are not standardised for all units of output, a condition that is found in intermittent manufacturing. Unstandardised workflows occur when a variety of different products are produced or when a basic type of product with many variations is made. In functional layouts, the processing components (work centres or departments) are grouped together according to the type of function they perform. This layout would most likely be used in hospitals or medical clinics, universities, office buildings and job shop facilities.

3.2.2 Line Layouts (also known as "Products Layouts")
These layouts are used when one standardised product is being produced, usually in large volume (a characteristic of continuous or reflective manufacturing). Each of the units of output requires the same sequence of operations from beginning to end. In line layout, work centres and equipment are, therefore, ideally arranged in a line to provide the specialised sequence of operations that will result in product build-up. Examples of this type of layout are: Automatic Car Washes, Cafeterial Serving Lines, Beverage Bottling Plants and Automatic Assembly.

3.2.3 Fixed Position Layout

This type of layout becomes necessary when, because of size, shape or any other characteristics, movement of the product is not feasible. In this case, the product remains in one location. Tools, equipment and human skills are brought to it, as needed, to perform the stages of build-up. Ships, locomotives and aircraft are manufactured in this way, also agricultural operations in which planning, planting, fertilising and harvesting are performed, as needed in the fields.

3.2.4 Group Technology Layout

This layout (referred to in Chapter 1) is more in keeping with the JIT philosophy, Group Technology gains for batch processes, some of the advantages inherent in high volume, line situations. It does this by changing the process or functional layout associated with batch manufacturing, into product layout associated with line. The approach adopted is to separate out these processes which do not lend themselves to the application of group technology, due to factors such as the level of investment involved and health considerations (e.g. noise or process waste/fumes). The next step is to group together families of like products. The third step is to determine the process configuration necessary to manufacture each product family involved and to layout the cell or line to reflect the manufacturing routines involved. The final stage is to complete a tooling analysis within each family. Parts within the family which use the same tooling are grouped together, this has the effect of reducing set-up time and, secondly, this feature is to be included as part of the design pre-requisites for future products[84].

Figure 3.1 shows the relationship between functional line and group layouts.

According to Burbidge (1971) Group Technology offers a major breakthrough in the UK's approach to Production Management for the following reasons:-

(i) Group layout provides the key for simplification throughout management.

(ii) The economic effects of group layout, and of the secondary changes which makes it possible, improve all the values of all the variables in the profitability equation [85].

3.2.5 Mix Mode Assembly Lines

These lines are designed to cope with a range of products in any scheduled combination. This is achieved with the use of computer controlled flow lines which schedule work in terms of the overall production requirement and short-term workloads at the various stations. The design of these assembly lines copes with high volume batch products by transferring the basis of the production from batch to line.

3.2.6 Transfer Lines

This assembly line is used where the volume demand for products is very high and further investment is justified, they are a hybrid between line and continuous process. There is a need to reduce manual inputs associated with a line process and move towards a process which automatically positions, completes the task and checks the quality, as an in-built part of the process. In order to achieve this, the process is numerically controlled in part or in full.

Functional Layout

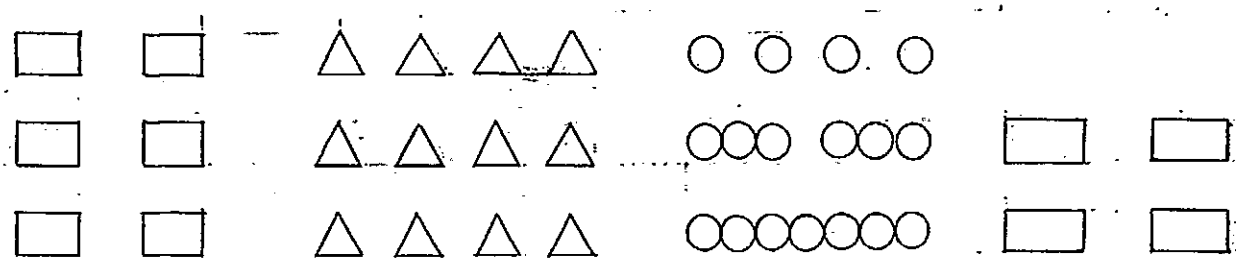

Lathe Shop | Milling Section | Drilling Section | Grinding Section

All products take their own operational sequence through the different sets of capacities.

Line Layout

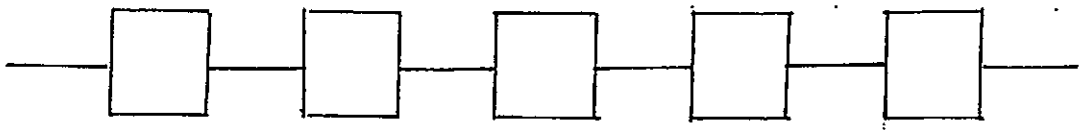

Series of work stations in operational sequence to complete one or a small range of products.

Group Layout

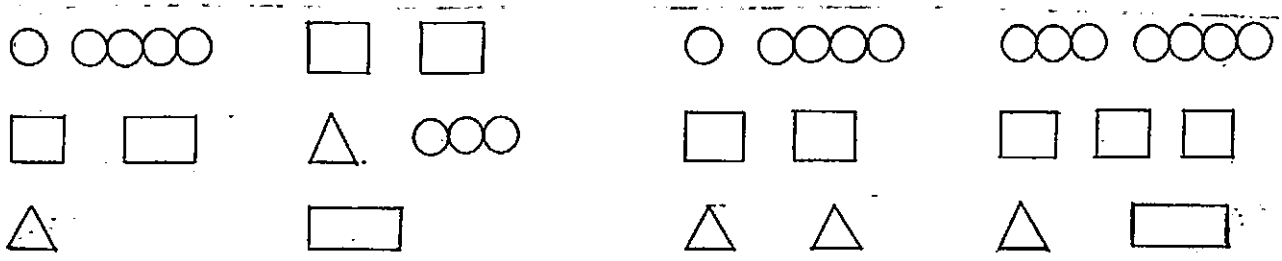

Group 1 | Group 2 | Group 3 | Group 4

All operations to make each product within the family are completed within a group of processes.

Figure 3.1 The relationship between types of layouts[84].

3.3 Key Objective Factors for Tecreel Cell Design

The key objective factors in determining the flowline layout centred around handling constraints, such as the minimum handling, walking and lifting of components. More specifically, however, the criteria which needed to be considered in the design of this cell are listed in (i) to (vi) below.

In keeping with group technology philosophy (see 3.2.4), the machines were organised in sequence of operation format. The main groups of machines were as follows:-

(a) Multi-spindle drills, milling machines, centreless grinding and buffing machines.
(b) De-grease, shotblast, spot and projection weld.
(c) Paint oven and main assembly benches.

The remaining machinery could be organised around three blocks. Various configurations were discussed in clockwise and anti-clockwise flow of patterns by shifting the 'blocks' around the scaled layout. Important criteria considered in the design of the cell are listed below:

(i) Stocks visible to workforce

In keeping with the JIT philosophy and the Kanban system, the stocks should always be visible to the workforce, this enables operators to virtually manage their own stock control.

(ii) Series Vs parallel bench arrangement

Company visits to JIT production lines, such as Toshiba and Lansing Linde, indicated series type bench flowlines are favoured over benches in parallel. Considerably less movement of components is usually entailed when work flows in a straight line between the proceeding and following operations.

(iii) Ventilation for paint area

The area around the paint oven required thorough ventilation and, preferably, should be placed near an open door, the infra red elements produced excessive heat and through hot periods the heat output is unbearable for the operators.

(iv) Contamination of paint oven from oily atmosphere

Pressed ports (tinware) contaminated with oil proved difficult to paint due to surface adhesion failure, the spray area therefore needed to be placed away from the machine shop.

(v) Hazardous fumes

Operations emitting hazardous fumes, such as de-greasing and painting, especially the paint oven, should be positioned as far as possible from the operators. It was not possible, however, to place the paint oven too remote from the assembly benches. Additional fan-assisted ventilation was arranged for the paint oven, to overcome this problem.

(vi) Ventilation ducts

Ventilation ducts suspended from the roof required free space underneath them, equipment could not be placed underneath these units, such as racks (too high) or the paint oven and de-grease (ventilation would distribute hazardous fumes).

3.4 Cell Structure after move

There are two basic sections that make up the Tecreel cell. These consist of the machine shop and the assembly cell. There are four basic types of Tecreel and the flowline was based around the most popular type, the 375, the average monthly breakdown of Tecreel build was as follows:-

	375	Type 4	4 port	Multifunction
Average monthly build	750	150	20	10

The flowline basically used on anti-clockwise flow of work. See Figure 3.3 for the flowline layout of Tecreel Cell.

In the machine shop section the flowline was more difficult to arrange, mainly due to Tecreel variations (variations would often use some of the same machines as the standard Tecreel), also the "Computer Numerically Controlled" (CNC) machines used for the first operations on the hub and shaft were grouped with the existing CNCs in Tecalemit's machine shop. The shaft also required outside contracted work for the hardening operation. This caused a minimum two-day delay in the flowline.

The Tecreel shafts entered the flowline along the multi-spindle drills, where flow and cross-flow holes were drilled and tapped. They would then proceed to external contractors for the hardening operation. The only exception to this was Type 4 shafts that utilised the mill machine for a slotting operation before hardening. The returned shafts were centreless ground before buffing and in the Type 4 case they were welded to a bracket before buffing. All shafts would then proceed to the assembly benches for attachment to tinware. The capstan, milling machines and deburr benches were used for operations on the Tecreel brackets and swivels.

The assembly section of the Tecreel cell was easier to organise in a Group Technology Cell format, so that the raw tinware entered the cell at one end and exited the cell at the other, after proceeding through the following operations:- de-grease and shotblast, spot and projection welding, spraying, hub and shaft assembly and test, tinware assembly, spring build, spring assembly, hosing up and boxing up. The only change to the flowline was swivels and the small quantity specials (4 port and multifunction reels). Each of the assembly operations was timed so that all operations were of approximately equal length and when a variation to the standard reel was produced, the operations would change to keep timings approximately equal.

3.5 Comparison of Flowline Layouts

The following figures show the Tecreel production layout before and after the move:

Figure 3.2 shows the production layout before the move, Figure 3.3 shows the flowline layout of the Tecreel cell after the move, for the most popular 375 Tecreel and the Type 4, and Figure 3.4 shows the same layout, but with the flow path for the small batch quantity 4 Port and Multifunction.

Figure 3.5 shows one of the considered alternative flowline layouts for the Tecreel cell, this layout became the main contender for the chosen flowline.

The selected flowline (Figure 3.3) met all of these criteria and has the added advantage that the Tecreel machine shop stayed alongside Tecalemit's machine shop, thus keeping noise and oil mist contamination away from the assembly areas of the factory. Additional cooling for the paint oven could be provided by opening the factory doors. All racks containing Kanban stock were visible and easily accessible from the work force and the main assembly benches were placed in series. Once components entered the assembly section, they travelled virtually in a straight line to Goods Outwards. The selected flowline reduced the area used by 206 square metres from 830 to 625 square metres. The main contender (Figure 3.5) to the selected flowline failed to meet all the criteria, in that the paint oven might become contaminated from the machine shop oil mist, also the assembly area did not lend itself to a linear flowline and, finally, the de-grease tank was situated near the assembly benches, which was in contravention to the 1974 Health and Safety at Work Act.

FIGURE 3 . 2

Layout of Tecreel Production before move

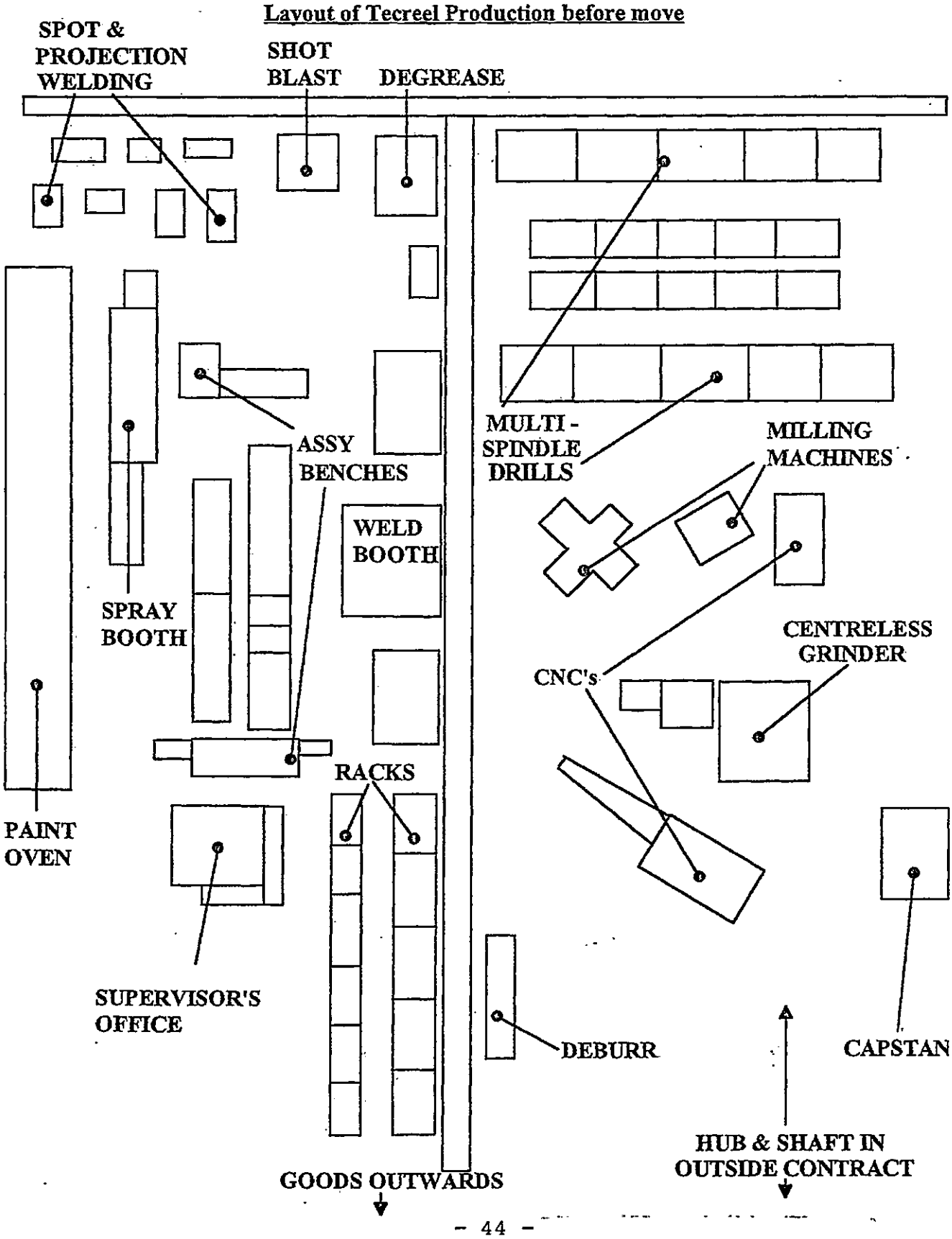

FIGURE 3 . 3

Flowline Layout of Tecreel Cell 375 and Type 4

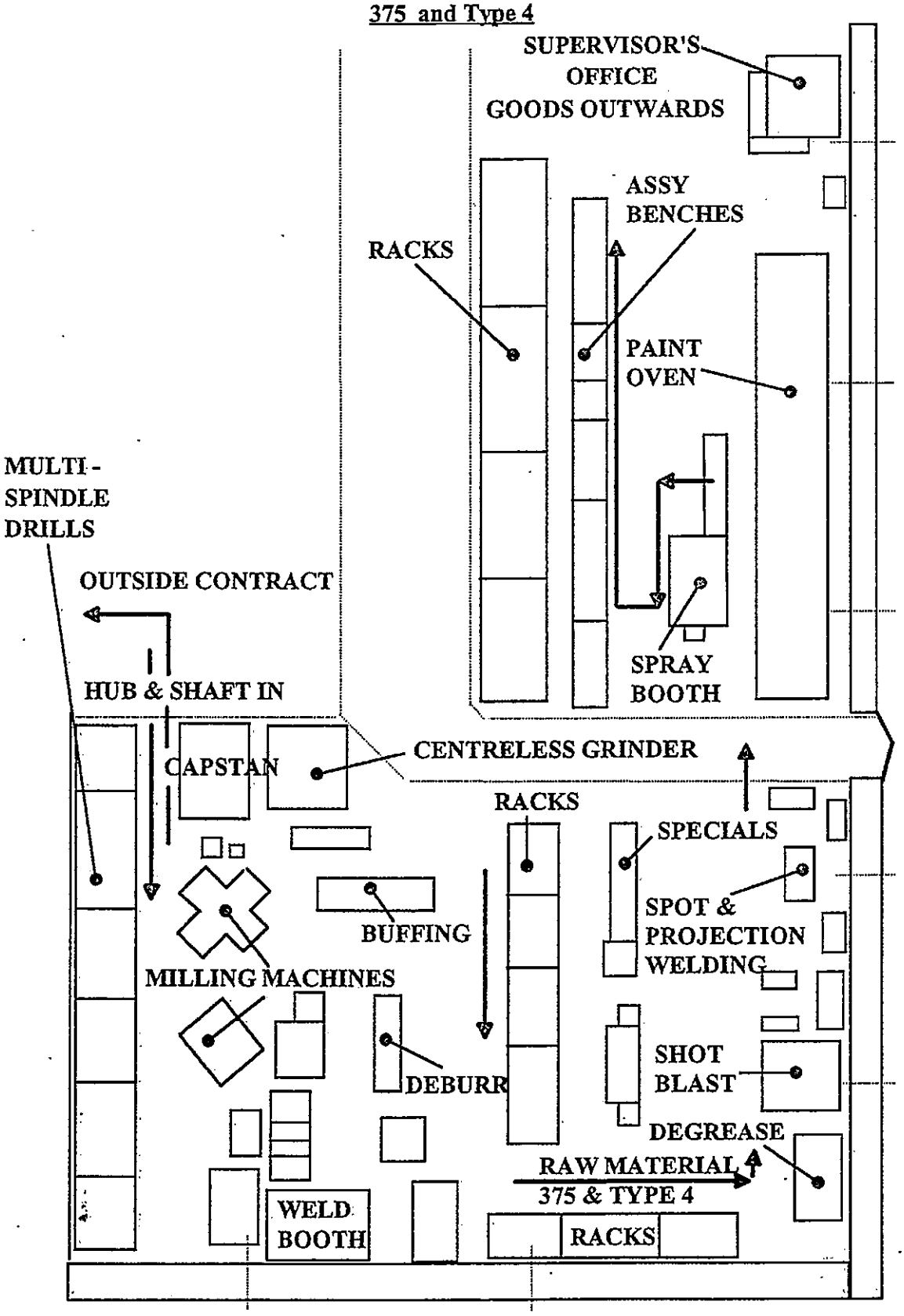

FIGURE 3.4
Flowline Layout of Tecreel Cell
4 Port and Multifunction

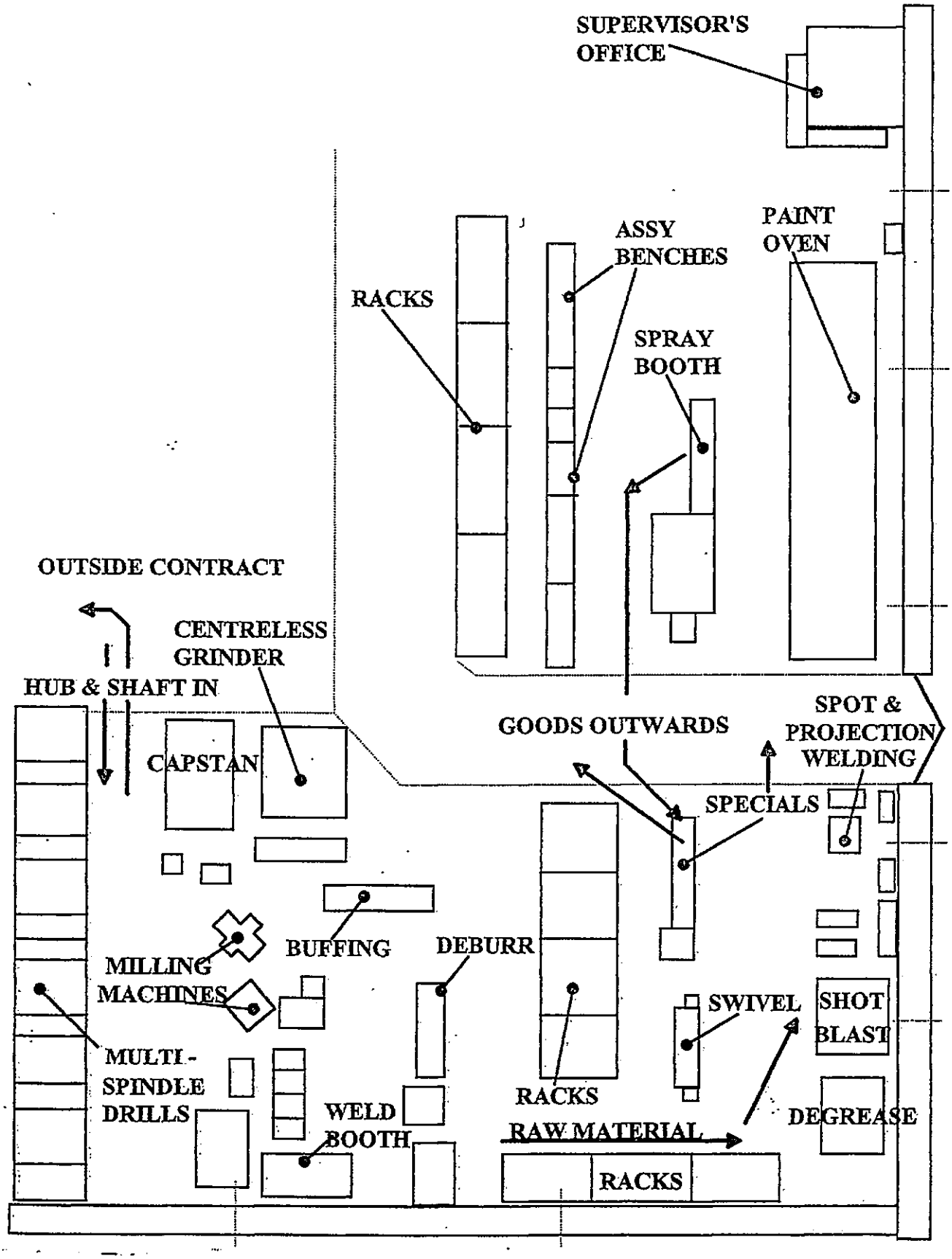

FIGURE 3 . 5
Alternative Flowline Layout of Tecreel Cell

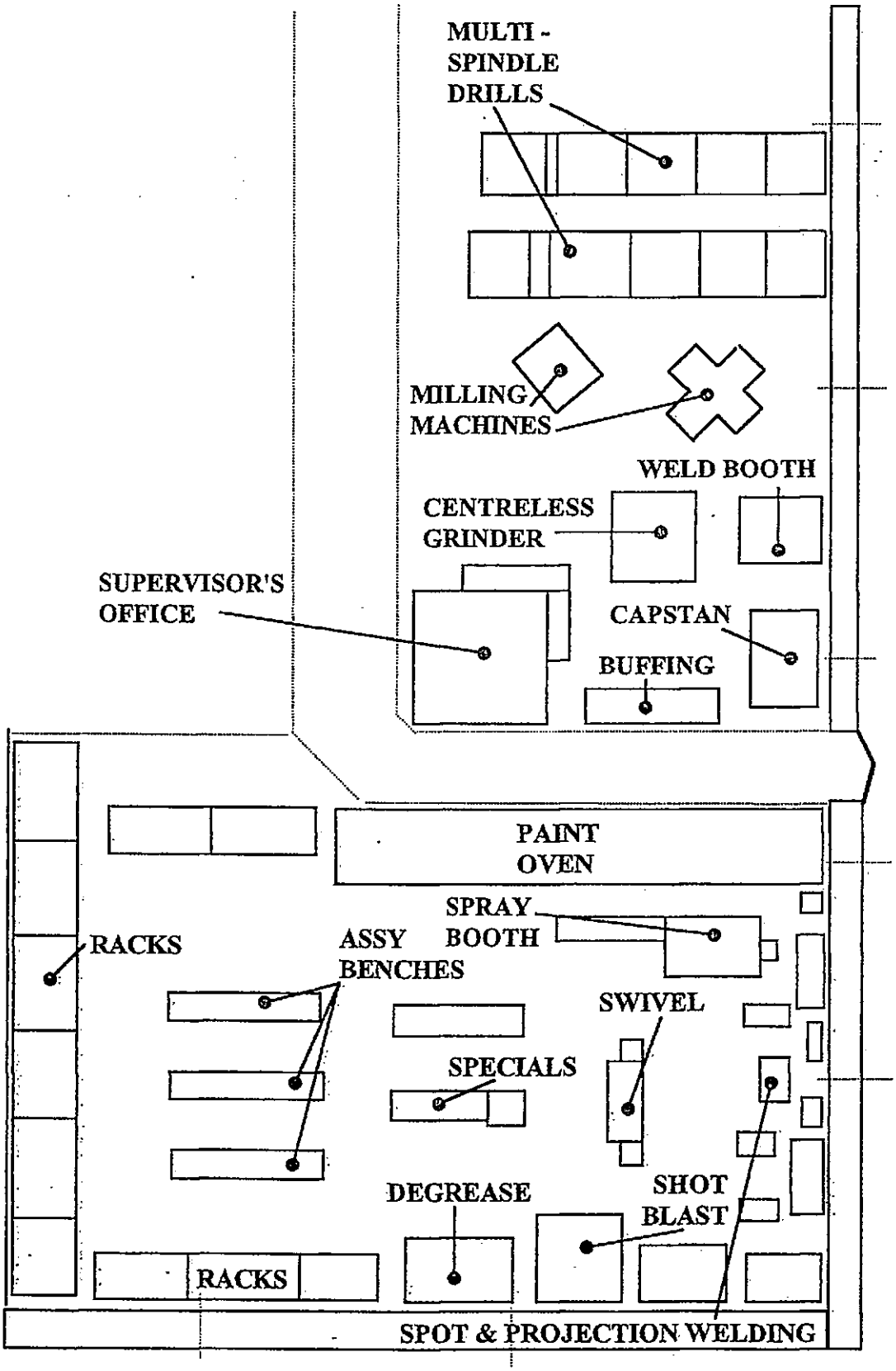

3.6 Balancing the Tecreel Cell

To balance the Tecreel cell it was necessary to allocate equal amounts of work to each station, i.e. to divide the total work content of the job as evenly as possible between the stations (known as line balancing). Without such balance, a certain amount of inefficiency or loss must inevitably occur, since some stations will have more work to perform than others. All stations will normally be required to process the same number of items within a given period of time. The time required to complete the work allocated to each station is known as the "Service Time". The time available at each station for the performance of the work is known as the "Cycle Time"[86].

Cycle Time = Service Time + Idle Time or Loss

= Productive Work Time + Non Productive Work Time + Idle Time or loss

Non Productive work will include the transfer of the product between stations and in the former will also include a certain amount of handling, movement etc.

See Figure 3.6 below.

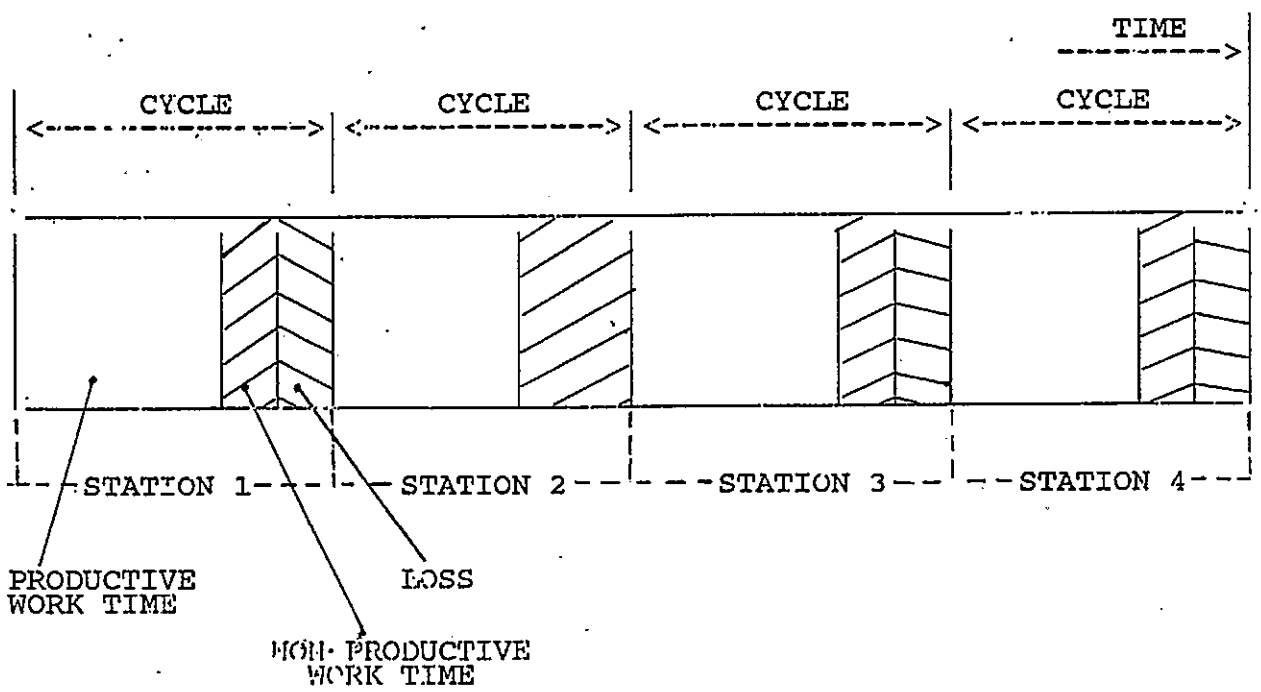

Figure 3.6 Showing the distribution of work in a typical flowline[86].

The machinery for the Tecreel flowline had previously been purchased. It was not, therefore, possible to introduce a new manufacturing system, such as automised equipment and conveyors. The work was also extremely labour-intensive, mainly due to the complex nature of assembly.

The allocation of elements to stations was also limited by "zoning" constraints. These are constraints which will necessitate or preclude the grouping of certain work elements at certain stations. For example, it may be essential that two work elements are not allocated to the same station if they might in some way interfere with each other, i.e. the oily pressure test operation and boxing-up operation. Such a constraint is known as a negative zoning constraint, in contrast to a positive zoning constraint, which necessitates the group of two or more work elements at one station, as might be the case when maximum utilisation of a single expensive piece of equipment is to be achieved, i.e. the pressure testing machine for hub and shaft assembly. Because of each constraint, perfect time balance is rarely achieved in practice and a certain amount of "balancing delay" or "balancing loss" is normally inevitable. Balance delay is the difference between the total time available for the completion of the job and the total time required. Undoubtedly, had the production been high volume and investment available, the flowline would have been better balanced with the use of automotive equipment.

3.7 Procedure for Industrial Removal

A list of machines with their service was drawn up before contacting industrial removal firms for quotes to remove and install equipment to the Estover Site. Two quotes for the plant move were obtained, these were from Vanguard (£38,920) and RED Machine Tool Services Limited (£28,974). A fast response was required to choose the contractor, as during summer periods industrial removal businesses are busy. Vanguard quoted for a single phase move and a double phase move. The double phase move is where the plant move would be split into two weekends. (This would be the case if a continuous period was not possible).

3.7.1 Selection of Industrial Remover

Discussion with management revealed a preference for the more experienced firm of Industrial remover, Vanguard, considering the timescale involved and the risk of not achieving the deadline (approximately £5k per day of production would be lost). The Single Phase Vanguard move was preferred due to its cost saving.

A contingency of over £2,600 was required to cover the cost of a paint oven cable. The bus bars at the new factory were rated at 200 amp and with all the equipment functioning (unlikely to occur) the rating would be exceeded, the paint oven alone required 100 amps per phase. Extra work also needed to be undertaken in ventilating the paint oven and pipework for welding and de-greasing tank cooling water.

3.8 Timescale for machinery installation

A plan of the timescale for installation was formulated and presented to management for their perusal. The plan allowed for the disconnection, removal and re-installation of the Tecreel equipment, the timing was critical, so an organised schedule was endorsed by Vanguard to ensure that production would be able to start on 13 August. The schedule is shown on the next page:-

JULY

21st 22nd 23rd 24th 25th 26th

ELECTRICITY, WATER & AIR PREPARATORY WORK + PAINT OVEN CABLE (5 DAYS)	Contingency 1 Day

JULY

27th 28th 29th 30th 31st 1st 2nd 3rd 4th 5th

Elec. Inst. Prep.	SINGLE PHASE MOVE OF TECREEL ASSEMBLY & MACHINE SHOP	Elec. Inst. Work	Contingency 2 Days

The schedule indicated that there would be adequate time to complete the move before the start of production. The move, however, took longer than expected and despite a hard working team of contractors working in extremely hot summer conditions, the pipe installation and electrical work took longer than expected and the move was completed on 13 August, bar a few minor jobs, such as sealing ventilation ducting in the factory roof.

CHAPTER 4

KANBAN AND THE ORDER TO MANUFACTURE SYSTEM

4.1 The Order to Manufacture System

Tecamec, in common with many other engineering companies, operated a laborious Materials Requirement Planning (MRP) system. This is often referred to as a MRP I and should not be confused with companies operating a more advanced planning system, known as a Manufacture Resource Planning system (MRP II). Figure 4.2 shows a detailed flow diagram of Tecamec's order to manufacture system and the integration of MRP within it, together with the interactions between each department.

Figure 4.1 shows the basic stages an order will progress through before customer receipt of goods.

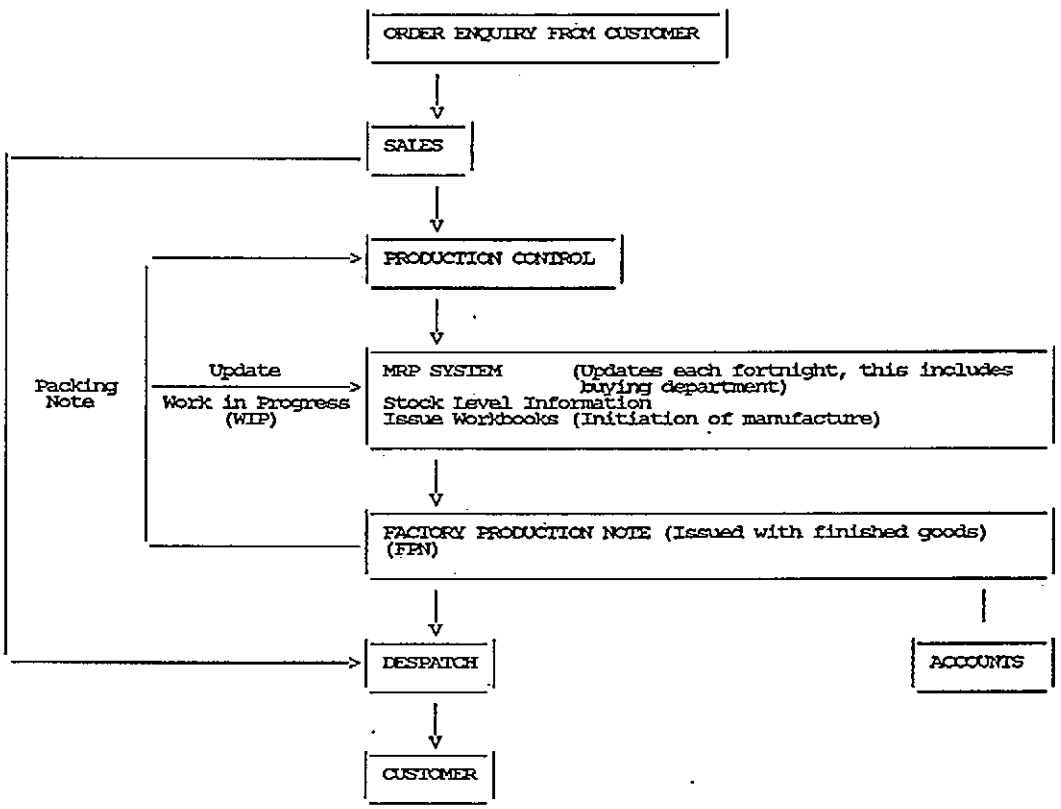

FIGURE 4.1

Describing the process for an order to manufacture with the use of the MRP system

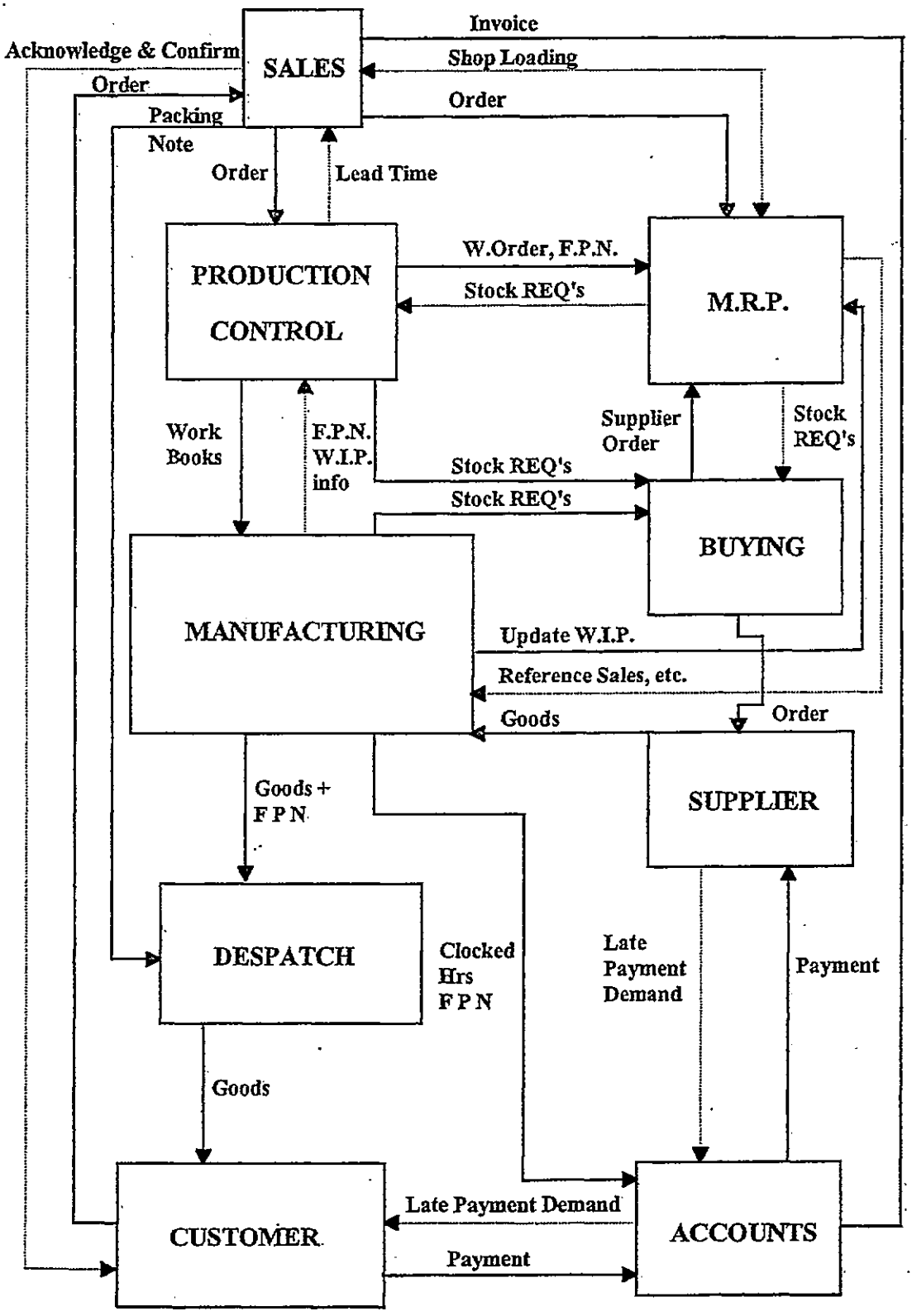

FIGURE 4.2.

Showing the order to manufacture system before the company merger

The system operated by totalising Factory Production Notes (FPN) - these are issued when goods were made (see figure 4.3) - together with this data, work in progress (WIP) information, provided by the section supervisor, is presented to production control.

Production control then inputs the appropriate data into the MRP system which updates itself at fortnightly intervals. The MRP system will analyse this information and calculate present stock levels, future stock requirements and print workbooks to initiate manufacture.

4.1.1 Difficulties and Recommendations for the MRP System

Problems occurred with the system because despite a regular output of scheduled orders, it would stock pile spare parts whether or not they were needed for manufacture. The system was open to errors, many components were taken for spares but not registered on MRP. The only correction of stock levels was during the annual stock take. Occasions could occur when Tecreels were being built, but were unable to be completed because MRP had calculated a quantity of components in stock that did not exist. The MRP system was updated every fortnight and many urgent orders bypassed the MRP system and were issued directly to the shop floor. After consulting various personnel operating the system, the following improvements were recommended:-

(i) Feedback from Production to Sales - this would alleviate the problem of unhappy customers' questions, trying to enquire whether their order had been manufactured.

(ii) Off the shelf items, such as fasteners and sealing rings need not be entered on the MRP and could be ordered by the supervisor on the section. The MRP system produced reams of data which were seldom referred to, a question of destroying the Brazilian rain forest for paper that no-one read.

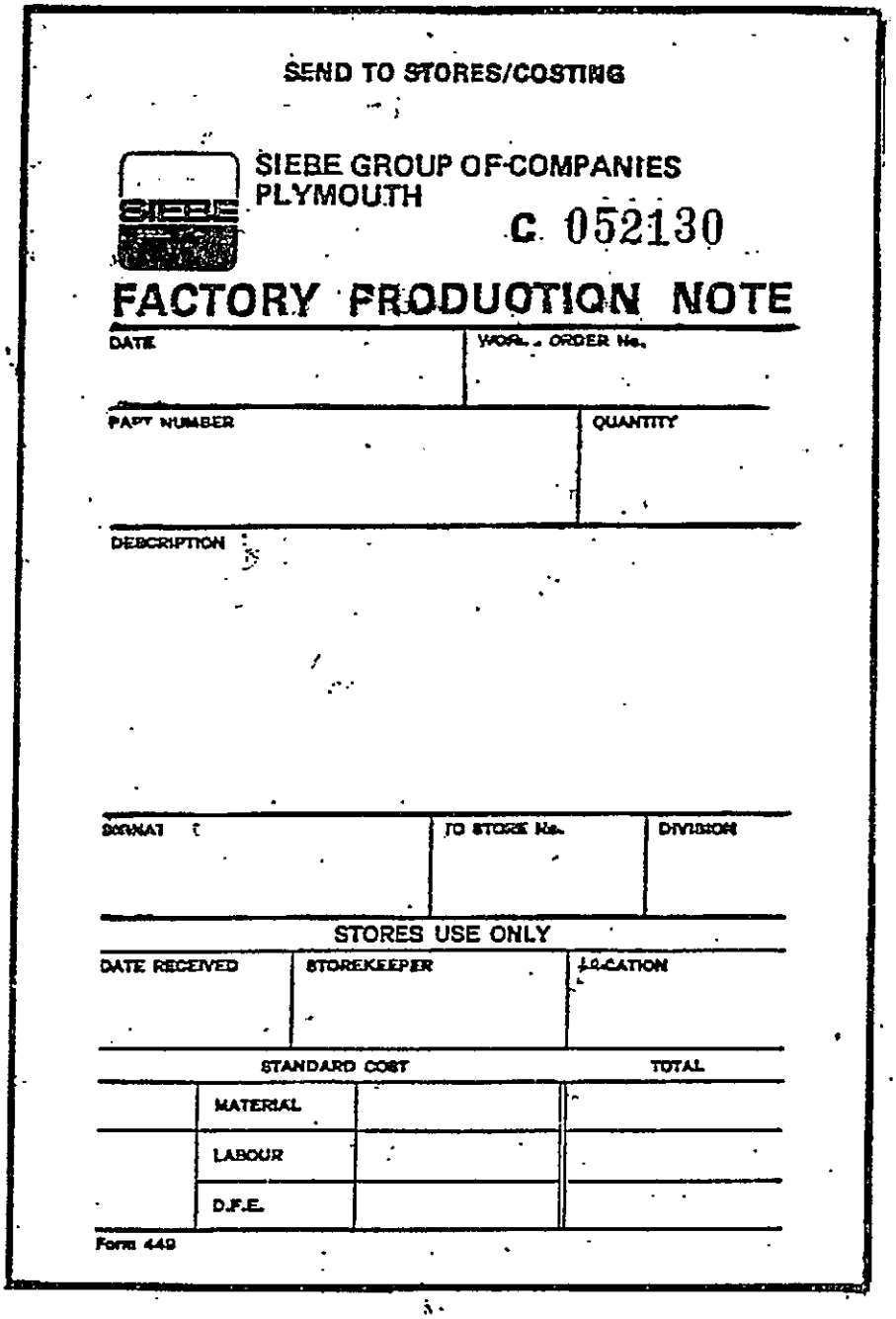

SEND TO STORES/COSTING

SIEBE GROUP OF COMPANIES
PLYMOUTH

C 052130

FACTORY PRODUCTION NOTE

DATE	WORK ORDER No.

PART NUMBER	QUANTITY

DESCRIPTION

DESTINATION	TO STORE No.	DIVISION

STORES USE ONLY

DATE RECEIVED	STOREKEEPER	LOCATION

		STANDARD COST	TOTAL
	MATERIAL		
	LABOUR		
	D.F.E.		

Form 449

FIGURE 4.3

Showing a Factory Production Note (FPN) for finished goods.

(iii) Prompt payment from accounts to suppliers would help. Some suppliers had refused to supply any further goods until accounts were settled. This caused poor feeling between customer and supplier, which is detrimental to the good supplier/customer relationship required for JIT production.

(iv) Additional stock control modules and more storage programmes would not only speed up the system but would also provide more accurate stock data.

4.1.2 Assessment of MRP and Alternatives

To assess the usefulness of MRP for a company's product, it is first necessary to evaluate the complexity of the product range. In many companies, such as Toshiba, Plymouth, MRP works very successfully hand-in-hand with JIT. In others, such as York International Limited, Basildon, an MRP II system works successfully, producing refrigeration and air-conditioning units.

It was fortunate in the Tecreel's case that the manufacture could be considered on a stand-alone cell basis, i.e. it did not require to be integrated in the planning system of the company's other products. The plant move itself also forced change, as the new site did not operate any MRP system. The traditional order-manufacture system does, however, offer some advantages:

- Familiarity with a trusted system
- Multiple sourcing protects buyer against shortages, encourages price competition and provides a broader technical base.
- Rigid design specification avoids misinterpretation with supplier.

This system also suffers from deficiencies such as:

- Purchase of costly, larger-than-needed batches.
- Buyer responsible for receiving, counting and inspecting.
- Larger amount of data input, resulting in excessive use of labour and paper.

A possible alternative for the system was 'Kanban' and the Tecreel was a prime candidate for this manual type stocking system. There were only approximately 300 components on the stocking list and no international shipments - requiring accurate forward scheduling. There was a reasonably stable demand rate and the system lent itself to a simpler stocking arrangement. This would not have been the case in such industries as aircraft manufacture, where the stocking list contains thousands of parts and often in small runs.

The benefits of using the Kanban system are likely to be:

- Simple visual stocking system.
- Tight control on inventory.
- Manual system requiring considerably less formal paperwork than MRP.
- Reduction in storage space required.
- Reduced material handling.
- Less waste of materials (i.e. unused stock).
- Better relationships with single source suppliers, resulting in consistent quality, possible saving on tooling and encouraged loyalty.
- Smaller storage containers holding exact quantities.
- Loose specifications on design, encouraging innovation from supplier; emphasis on performance.

The deficiencies of such a system are likely to be:

- More frequent deliveries needed, increased transportation costs.
- Close supervision needed for on time deliveries.
- Risk of shortages occurring.

4.2 The Kanban system

The moving of the production line gave an ideal opportunity to change the MRP system to Kanban. The new site already operated a 'Kanban two card system'.

The Kanban two card system prevents unnecessary work in progress and stock by the use of a simple visual stocking system. This system primarily utilises two cards, one red and one blue, each attached to one container or, in some cases, the same container bin with a partition between the red and blue stock. The blue card on average represents one month's stock holding, the red card represents the lead time to manufacture the product, plus a 20% contingency. An A, B, C priority rating system is also used in conjunction with the cards to control the stocking of expensive items. The priority system assessed whether items were A, B or C classification by the price and usage of the components.

The opportunity therefore arose to implement this system with the total support of Tecalemit's management, however, there was little time for a gentle interchange period and implementation was scheduled for the first day of production after the plant move.

4.2.1 Implementing the Kanban System

To implement the two card system a list of all the Tecreel components and their sales figures for the previous three years were used. From this an average monthly stock figure was calculated. As an immediate measure, either one, two or three months stock was placed in the blue card container (according to the A, B, C priority system) and the lead time stock was placed in the red card container together with a 20% contingency (i.e. the red card bin contained a quantity of stock 'representing' the lead time to manufacture the product). A sample Kanban card is shown in Figure 4.4.

BULK ISSUE T.REEL
PART NUMBER 23733-532
DESCRIPTION CIRCLIP
AREA QUANTITY 30
KANBAN RACK 6
AREA LOCATION BOC

FIGURE 4.4

Showing a typical Kanban card.

An A, B, C priority rating system was used as a supplement to the card system, class 'A' items had the highest cost and usage and should, therefore, be kept to a minimum (in some cases, only two weeks stock) Class 'C' items have the lowest usage and cost and needed less vigilance. Classing items, either A,B or C relied on good judgement from the stock controller, on average Class A items would have one month's blue stock holding, Class B items two months holding and Class C items three months holding.

The system operated by allowing the production to exhaust the blue card container, this card would then be sent to production control for re-order. At this stage components were taken from the red card container, before this container had emptied the 'blue components' should arrive and these would first replenish the red card container and the remainder placed in the blue card container ready for their next application. A list of the two hundred and ninety seven (BOC and in-house manufactured) Tecreel components, together with their respective card quantities and priority rating is shown in Appendix 1.

Although only two cards have been mentioned so far, two additional cards, one green (i) and one white (ii) were also used in the Kanban system.

(i) The green card was utilised when a particular card stock overflowed the Kanban area, either due to the physical size of the components or just a copious quantity. An operator using a green card component would be aware that the same component existed elsewhere on the shopfloor.

(ii) The white card was utilised on the rare occasion when the red card quantity had been exhausted. The white card gave a visual warning that a particular item was out of stock. White cards were discussed during weekly 'shortage meetings' to assess the urgency of the shortage problem and rectification action, if any, to be taken. All section supervisors attended this meeting, headed by the plant manager.

4.2.2 Resolving Kanban Difficulties

Initially the Kanban system had some component starvation, this was to be expected when setting up a new system and an initial probation period was required before the stock levels were adjusted to resolve these shortages. By summing the 'call offs' of the Blue and Red cards, it was possible to adjust the component quantities to regulate the next call off. i.e. If the blue card was permanently returned to production control for re-order, then it would be necessary to increase the blue card quantity. If the red card regularly returned to production control, then it would be necessary to investigate the 'lead time' re-order quantity. This fine adjustment of the system was monitored by the production control, in some cases permitting blue card stocks to be reduced to only two weeks.

Problems were also encountered with containers that stored both blue and red stock, operators sometimes neglected to return blue cards for re-order, as it was difficult to distinguish between the two stocks. In the case of Tecreel hose variations, the blue stock would often contain only one or two hoses, however, it was necessary to keep blue and red stock together to economise on floor space.

4.2.3 Workforce Training

Surprisingly little training was required for the workforce, the visual stocking system was easy to use and a short induction into the Kanban system and its uses in other factories was adequate for basic operatives understanding. A stocking system that was once controlled entirely by a production control computerised system had overnight become managed by the workforce. Emphasis was needed, however, on returning cards to production control. This was essential if the system was to succeed, more training in this area would have helped.

CHAPTER 5

FLOWLINE IMPROVEMENTS AND TOTAL QUALITY MANAGEMENT (TQM)

5.1 Introduction

Flowlines are in constant need of improvement if the product is to upgrade itself in the face of competition. A philosophical approach to this can be summed up in a 'Hal Mather' maxim, "If you always do what you always did, you will always get what you always got"! Flowline improvements can result in accelerated process times and/or improved quality, improving quality does not necessarily mean longer process times. Without high levels of quality, there is no JIT, there was little doubt in the Tecreel's case, as with most production lines, that the people most able to recommend improvements were the line operatives themselves. The engineers really need only convert a verbal suggestion into a practical solution.

Tecreel's quality control involved the traditional approach to quality which focussed on quality control inspectors and complex procedures and systems for rejecting and scrapping material and products. These approaches did not improve quality, however, and neither did they add value to the product. Within a JIT methodology environment, the need was to move away from quality inspectors and place more emphasis on operator-controlled quality.

The Tecreel section was ripe for quality improvements, both in processes and in personnel (i.e. operator responsibility for quality), for many years production had operated on workers' preconceived notions, little was written down and quality would change depending on which operator was working at the time. Many operations needed process control and with the intended advent of BS5750 (ISO 9000) in November 1991, there was need for a change in quality control. Pressure too was being placed by OEMs insisting on quality improvements by the introduction of process control as part of the production line. Murdick et al. (1990) stated that "The quality of a service or product is determined by the user's perception. It is the degree to which the bundle of service attitudes, as a whole, satisfies the user." It is essential that the customer receives a good impression at each contact stage of the service.

Total Quality Management (TQM) is more than just a buzzword nowadays. Total quality focusses on providing customer satisfaction of a product or service. It is essential for the survival of an organisation in markets when there is nearly always a choice. Total quality is defined as management driven, but company-wide ethos, to ensure that things are 'right first time' and have 'zero defects' and total conformance to specification. These familiar phrases encapsulate a process of continuing improvement that is of primary importance to JIT.

5.2 Implementation of Flowline Improvements and Suggestions from Workforce

The majority of flowline improvements may well lead to improved quality, certainly flowline enhancement can improve working conditions for the operators and the interest generated within the flowline boosts morale. Within some JIT environments compulsory workforce suggestion schemes are common, with 'Quality Circles' meeting on a regular basis.

In Tecalemit's case, many flowline improvement suggestions were proposed by the workforce for the Tecreel production line, such improvements were considered by the engineering department before implementation. Again it was better for the workforce itself to implement where possible, their own suggestions, as operators would like their own ideas to succeed, however, this is far easier said than accomplished. The following is a list of flowline improvements, including suggestions presented from Tecreel operators, and the actions taken.

(i) Easier fabrication of Type 4 spring, the section supervisor requested a more efficient method of assembling the spring into its container and removing a securing wire to keep the spring safe, the present method utilised a crucifix device and hammers which was laborious and often damaged the container.

Action:- A press tool device was designed and manufactured which removed the securing wire, whilst pressing the spring into its container, a flypress was used to operate the device.

(ii) A hydraulic test rig to monitor fluid loss on each side of swivel and not require blanking off both sides of swivel.

Action:- No action taken, test rig would be expensive and swivels are likely to be phased out.

(iii) New lids for wooden storage boxes, avoids excessive use of corrugated cardboard covering storage containers, to avoid contamination of components.

Action:- New JIT production line virtually eliminated work-in-progress/stock and, therefore, no protection was required.

(iv) Plastic bins or more packing protection required for storage of swivel shafts, this would prevent damage occurring to shafts stored in metal bins.

Action:- Newspaper was used when packing shafts in metal bins.

(v) Jig for assembling adaptors in banjos, present method involved cumbersome packing pieces and a vice, a fairly simple design would allow clamping of banjos to overcome assembly difficulty.

Action:- Jig design was investigated, but no action was taken due to phasing out of swivels.

(vi) Polishing of Tecreel shafts in-house, the present method of manufacture involved sending Tecreel shafts to a sister company for polishing, this semi-skilled operation could be accomplished by a line operator more economically and permitting a smoother flowline.

Action:- An unused hand polishing machine was commandeered and implemented during the set-up of JIT production line, operative training was given by the sister company.

(vii) Magnetisation of long reach hand spanners for Type 4 and multi-function Tecreel assembly this would assist operators to connect threads between nuts and studs where accessibility is difficult.

Action:- Awaiting magnetisation of tools by Plymouth Polytechnic South West.

(viii) Review flowline so de-greased items are immediately prescribed for spraying, due to particle contamination (oil, dirt and water) de-greased items often became contaminated before spraying, resulting in poor paint cohesion.

Action:- Since plant move, new JIT flowline shotblasts and de-greases only enough tinware required for a production run, thus preventing waiting time during which tinware became contaminated.

(ix) Trolleys required for transfer of sprayed items to assembly, the sprayed flanges and drums were placed on wooden-sided pallets to be collected by line workers for assembly. Trolleys would offer considerably less material handling and movement.

Action:- Canteen food tray trolleys were investigated, but new JIT flowline produced minimum painted stock which was placed directly behind appropriate assembly benches.

(x) Alternative method for spraying Type 4 tinware, the present method required sub-assemblies to pass through oven four times; 1) prime one side, 2) prime other side, 3) top coat one side, 4) top coat other side. Spot welded assemblies were alleged to be too difficult to spray in one operation.

Action:- An alternative hook design was used that allowed the assembly to be painted in just two passes through the oven.

(xi) **Automatic dispensing of loctite,** the loctite was required to seal blanking plugs in the end of the hosereel shaft. Plugs were usually 'dipped' in a pot of loctite before being screwed in the end of the shaft, this process was both messy and wasteful with no process control.

Action:- A second hand 'Bondmatic 7000' Loctite dispensing machine was implemented into the flowline. The machine used a proximity switch to trigger the dispensation of Loctite. The machine was superfluous to requirements from a previous production process. The implementation saved the company an estimated £1,000 per annum in wasted loctite.

5.2.1 Balancing the Assembly Flowline

It is possible to classify production planning techniques, according to push and pull logic:

- A Master Production Schedule (MPS), which employs market forecasting, is a plan which determines the manufacture of end items in anticipation of its needs, this logic is push.
- Both the MPS and the Final Assembly Schedule (FAS) when executed by order of customers, the pull logic applies, since they are carried out upon request. In this case MPS and FAS objects are end items[21].

The final assembly process for the Tecreel build consisted of four assembly benches. If a 'pull' type manufacturing system was to be achieved, the benches would need to be finely tuned to prevent bottlenecks occurring further down the line. For this purpose, timings were acquired for all the operations in the assembly section, this was accomplished with the use of job cards issued to the workforce to record operation times. See Figure 2.6 for the various operation timings with sample size and comparison to their relevant layout times in the company's computer system. The percentage variation shows the difference between the highest and lowest timing relative to the mean. The assembly benches were separated into four basic sub-assembly operations:-

Bench 1 - Hub and Shaft assembly and test.
Bench 2 - Assemble tinware, including hub and shaft.
Bench 3 - Build spring and assemble on tinware.
Bench 4 - Hosing up and box.

It was fairly clear from the onset that the operations were unbalanced. The hub and shaft operation was particularly out of balance with a mean time of 10.41 mins, this was far greater than any other operation times.

Two options were available, (i) separating the sub-assembly into further operations and passing work to other assembly benches or (ii) reducing the time for this operation. A preliminary investigation of assembly bench 1 revealed considerable time was lost in waiting for the loctite to cure before the pressure test, this could be partially compensated by building larger batches, therefore allowing enough time for the first assemblies to cure - this is not, however, conducive to a JIT environment.

The solution was found by changing the loctite from '542' to '648' type and using an activator type 'N' to accelerate the curing time, this enabled the pressure test to be conducted immediately after build, resulting in just single assemblies being built before transferring to assembly bench 2.

With the new flowline in place and a reduced operation time for hub and shaft assembly, a new set of timings was taken. Although not a formally conducted time study, assembly bench operation times were recorded by stopwatch and the mean calculated for each operation. Appendix 2 shows the results of the time study. With mean times now known it was necessary to study the operations more closely, the operations for each bench (referred to as stations) were listed, together with their appropriate time. The assembly was arranged into four types of build, these were:-

(i) Tecreels without hose and with adaptors.
(ii) Tecreels without hose and without adaptors.
(iii) Tecreels with hose and with adaptors and brackets.
(iv) Tecreels with hose and without adaptors and brackets.

Each station was equalised as far as possible with the preceding or following stations. On two of the Tecreel build types only three of the stations were utilised. Although the final station's time appeared higher than the others, in practice the boxing up operation was often completed by spare labour or the section supervisor, thus bringing the total time back in line with other stations. Figure 5.1 and Figure 5.2 show the trial Tecreel flowline layout for the four types of hosereel build referred to above.

5.3 Quality and the Introduction of Process Control

Without high levels of quality, there is no JIT, with waste taken out of production the need for improved quality in design, supply and processing sharply increases. Tecalemit needed to gain credibility in quality and to this end the implementation of BS5750 was programmed for November 1991.

Since the first publication of BS5750 in 1979, the notional base of quality competent firms has grown apace. There are now some 17,000 firms assessed and registered by second and third parties against BS5750 or direct equivalent standards. The much wider interest in quality standards led to the International Organisation for Standardisation (ISO) initiating in 1983. Work on the international standard was completed in 1987, with the publication of the ISO 9,000 series of five standards. The ISO 9,000 series was published as British Standards BS5750:1987 with effect from 29 May 1987.

The nature and degree of organisation, structure, resources, responsibilities, procedures and processes are essential management decisions affecting quality. It is important to document these in a manner so they are readily understood by appropriate personnel (in this case Tecreel operatives), and that the quality system is maintained at a level to provide consistent control of quality. With systems controlled from start to finish, economics will be found in resources from time saved on re-planning or modifying designs. A complete record of every stage of production is invaluable for product or process improvement and in relation to any product liability claim. BS5750 concerns the fitness for purpose and safety in use, since it is the service provided or product designed and constructed to satisfy the customer's needs.

TECALEMIT SYSTEMS LIMITED

TRIAL TECREEL FLOWLINE ASSEMBLY LAYOUT

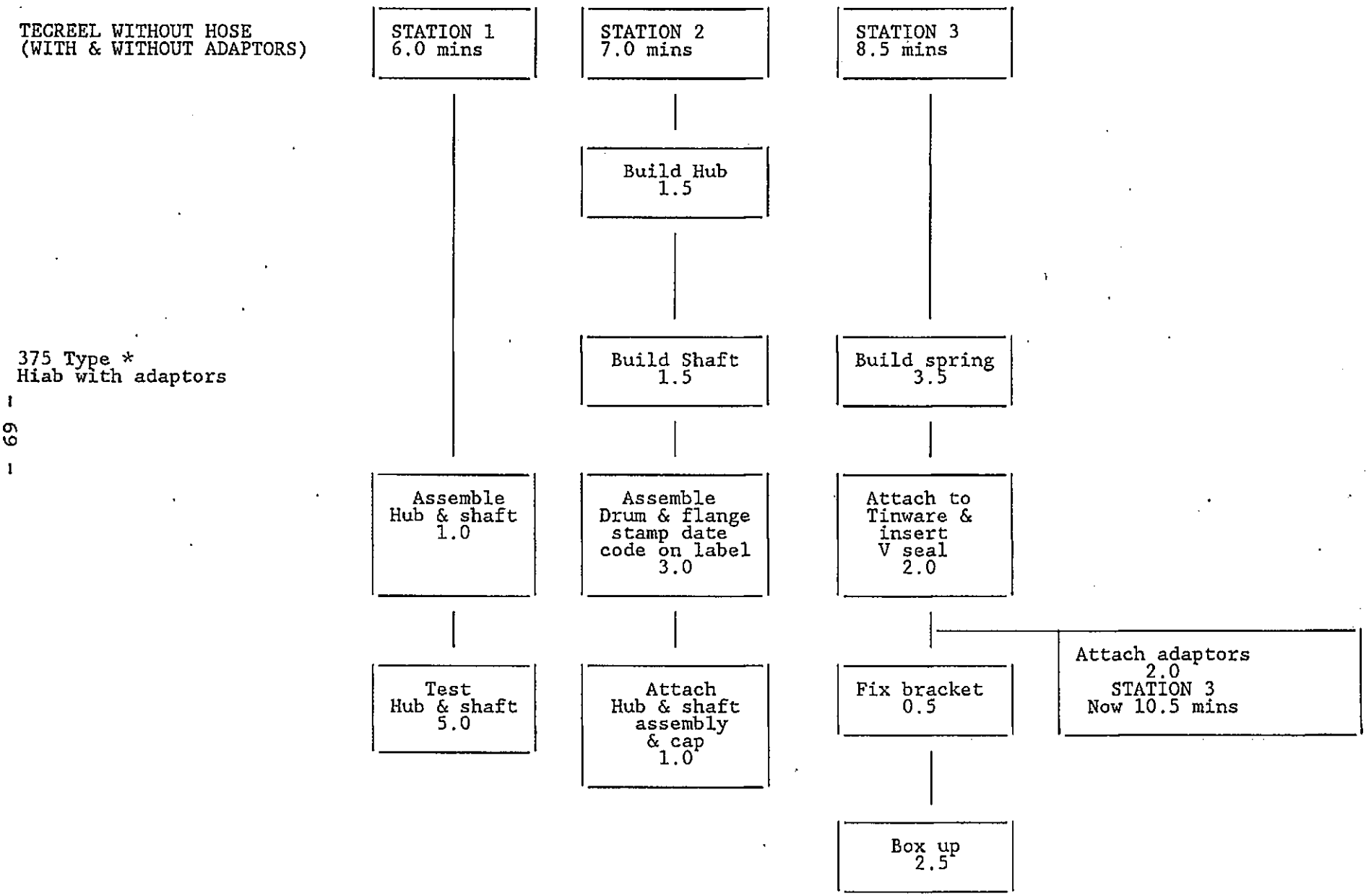

FIGURE 5.1

Showing trial Tecreel flowline assembly layout for hosereels without hose and with or without adaptors.

TECALEMIT SYSTEMS LIMITED

TRIAL TECREEL FLOWLINE ASSEMBLY LAYOUT

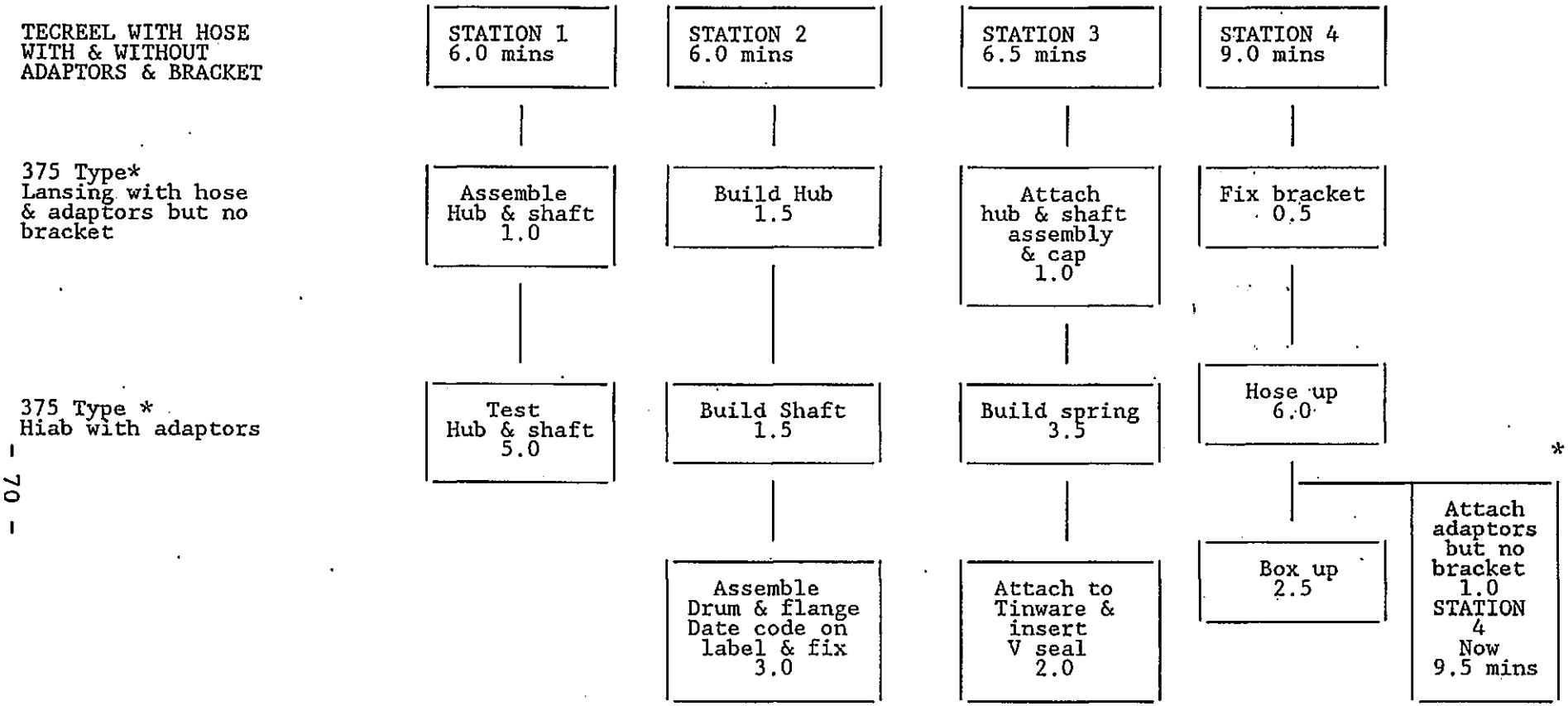

FIGURE 5.2

Showing trial Tecreel flowline assembly layout for hosereels with hose and with or without adaptors and brackets.

Within the JIT environment, the aim is zero defects. The use of Statistical Process Control (SPC) is a useful tool in achieving this goal and used in conjunction with Failure Mode and Effects Analysis (FMEA) - see following page, process control can be directed at the most critical processes. Many of the Tecreel's manufacturing activities exhibited lack of process control, quality failures were often only established during the final assembly process, either during the hub and shaft pressure test and assembly of tinware, or even worse, out in the field, this was a costly manner to find mistakes.

Traditionally, Tecamec had organised quality with an inspection department placed well away from the process, this was not complimentary to JIT. With small batch quantities it is far easier to locate defects early in the build process before final assemblies are made. SPC can be a useful tool for this, SPC allows the process to be controlled not only for fault finding, but with the use of control limits an indication is given when a process is approaching a 'reject' situation.

5.3.1 Statistical Process Control (SPC) and Failure Mode and Effects Analysis (FMEA)

Apart from a tool for identifying areas where SPC needs to be implemented, FMEA can also be used in the design of components, however, as the Tecreel was already in production, it was only appropriate to use on processes. A team was formed to apply FMEA to the Tecreel process, this consisted of the engineering manager, quality manager and two engineers which included myself.

Analysis of Tecreel's customer warranties revealed that problems had concentrated on two areas, the sealing arrangement and the spring. The spring manufacture was contracted to a midlands company and was renowned to be a somewhat 'black art' business, so at the initial stage it was decided to concentrate FMEA on the hub and shaft operations. A process FMEA was completed on the hub and shaft, the results of which can be seen in Appendix 3. FMEA assesses the potential mode, cause and effect of failure and the current controls, these are ranked in order of occurrence (O), severity (S) and detection (D), using a quality procedure manual as the assessment guide.

A Risk Priority Number (RPN) is found by multiplying O,S,D together. The areas identified with the highest RPNs and occurrence rankings are given priority for corrective action or SPC. The control chart also contains columns for recommended actions, the responsible engineer and for documenting resulting conditions from actions taken. FMEA provides an excellent method for documenting quality improvements. A sample SPC implemented on the Tecreel hub is shown in Appendix 4.

The highest RPNs for the hub and shaft FMEA were found to be:-

(i) Incorrectly ground journal diameter on shaft, resulting in ovality of shaft.

Action:- Ovality checks were investigated, but required out of roundness inspection machine, authority awaited for purchase.

(ii) Uneven hand mopped polished shaft. (Inherent 'out of control' process).

Action:- Surface finish checks were instigated for shaft and a semi-automatic buffing machine was investigated (£8,750). Buffing trials proved successful on this machine, awaiting authority to purchase. SPC implemented on buffing process.

(iii) Bore of hub undersize, oversize or tapered.

Action:- SPC initiated on computer numerical controlled (CNC) turning machine to control bore dimensions.

(iv) Bore of hub oval.

Action:- Requires out of roundness inspection machine, authority awaited for purchase.

(v) Low-grade surface finish on hub due to supply of poor quality material.

Action:- Request certificate of conformity for material from supplier and improved surface finish specified for bore of hub, SPC implemented on Roller burnishing of hub.

(vi) Low-grade surface finish on seal grooves in hub.

Action:- Purchased facility for measuring surface finish in grooves. Random inspection implemented.

5.3.2 The Implementation of Quality Improvements

It is surprising how many quality improvements are plain common sense, just a fleeting visit to the production area shows there are ongoing bad practices which have continued for years. Quality is dynamic, there has to be continuous ongoing improvement for quality to succeed, so often it is easy for quality projects to be abandoned for some other more pressing engineering function. If quality problems are being approached because of customer complaints then the supplier may eventually lose his customer.

The following is a list of proactive and reactive quality improvements implemented in the Tecreel cell over the project period:-

(i) Torque control in Tecreel assembly, torqueing of all nuts and screws had previously been conducted using 15-year old air wrenches and a variety of spanners and hexagon drivers. These operations were dependent upon operators' perceived torque which varied between 'strong' and 'weak' operators.

Action:- Average measurements were taken of torque values for all nuts and screws used in the assembly process. (See Appendix 5 for measurement of torques). Modern one-shot clutch air guns were purchased and implemented where possible in the build process. For larger torque values, hand held torque wrenches were purchased, an operative was trained to calibrate weekly all torque wrenches. Appendix 5 describes the calibration procedure. The torque control project took several months to fully implement before operative difficulties were solved.

(ii) Job Information Sheets (JIS) for Tecreel operatives, this ongoing process replaced many previous 'out of date' procedures. Having the job procedure documented for every operation helped cross training of operatives and also encouraged a standard of quality and consistency no matter which operative took control of the operation. An example of a JIS for assembly station 1 is shown in Appendix 6.

(iii) SPC control on the projection welding process, the assembly of the tinware sometimes resulted in sheared studs due to sub-standard welding.

Action:- SPC was implemented on the weld process enabling a test for the welded studs every half hour by use of a dial indicated torque wrench. Values were recorded on a chart and if failures occurred, the section supervisor informed maintenance.

(iv) Paint viscosity measurement, the paint supplied varied considerably in quality due to unreliable viscosity, paint thinners had previously been added purely on operatives' perceived notions.

Action:- A British Standards viscosity cup was purchased, so viscosity of the paint was measured before use and adjusted accordingly. This became a recorded control process.

(v) Contamination of hub and shaft rotary seals, the seals were often kept in boxes exposed to atmospheric dirt, this could result in an eventual damaged rubber seal and leakage.

Action:- Seals were kept in clean transparent jars, soaked in clean oil.

CHAPTER 6

VALUE ANALYSIS ON THE DESIGN AND MANUFACTURE OF THE TECREEL

6.1 Definition

Value Analysis and Value Engineering began in the United States in the latter part of the Second World War and has been used in Great Britain since the early 1950s with considerable success in many industries. VA is basically the removal of unnecessary cost, a suitable definition of VA is; an organised creative approach that has for its purpose the efficient identification (and removal) of cost that provides neither quality, nor use, nor life, nor appearance, nor customer features[87]. The techniques of Value Engineering are in principle the same as VA but applied at the design stage (i.e. not during production).

6.2 Objectives for the Value Analysis Study

The ultimate aim for Tecalemit is to produce a Tecreel that can be proved to perform better than competition both in terms of function and cost. Tecalemit faces competition from many European hosereel manufacturers, these are:-

Cascade, Holland (40%), Deutsche Tecalemit, Germany (18%), Aeromotive, Wales (5%), Mayer, Germany (6%), Bolzoni, Italy (5%), others (5%), Tecalemit's share is 22%.

One effective way to reduce costs is Value Analysis (VA). To this end, a VA study on the design and manufacture of the Tecreel was effected in March 1991. A multi-disciplinary team selected by the Engineering director consisted of three engineers, one buyer and one production operative. My function was to chair the team, VA meetings took place fortnightly. The objectives set for the team were a 15% reduction on works cost for the 375 Tecreel (most popular Tecreel), a saving of £17 out of a works cost of £112, this would amount to an annual saving of £142,800 (based on an average build of 700 Tecreels/month).

The cost reduction for the Tecreel was to be achieved whilst maintaining or improving on an agreed technical specification, the brief parameters of which are described below:

- A working pressure of 210 bars and a proof pressure of 310 bars.

- A notional life of 25,000 cycles. One cycle is equivalent to extending and retracting 6.5m of $^{3}/_{8}$" hose on the Tecalemit test rig. This life is approximately equal to two years of trouble free operation in a high lift environment.

- The flange diameter should be capable of accommodating hose pull-offs of 7.2m for $^{3}/_{8}$" bore hose, 8.3m for $^{5}/_{16}$" bore hose and 8.5m for $^{1}/_{4}$" bore hose.

- The Tecreel should be capable of operating in a temperature range of between -30°C to +40°C.

- The hose retraction system (spring on existing design) should be capable of retracting 7.2m of $^{3}/_{8}$" bore hose when under pressure.

- The Tecreel width should be as thin as possible in order to minimise obstruction to forklift drivers' visibility.

6.3 Implementation Strategy

An action plan and a time schedule for implementation of the project was drawn up. See Appendix 7 for a tentative time schedule for the VA. The action plan can broadly be divided into three main stages:

- The Feasibility study: This study was carried out to provide assurance that the VA study could be conducted and its recommendations implemented within the envisaged time scale.

- The Design and Manufacturing study: This stage involved the generation and evaluation of new (and existing) ideas to assess their cost saving potential. Consideration was given to all aspects including:

  Design modifications to eliminate unnecessary features/components.
  New materials.
  Improvements in manufacturing methods.
  Identification of alternative cheaper suppliers of materials, bought out components and services.

- Implementation stage: This stage involves the planning of, and overseeing the implementation of, the recommendations of the study and evaluation of the success or otherwise of the study.

6.3.1 Feasibility Study

The feasibility study involved the following main activities:

- Visits to major Tecreel customers and users.

- A Time Study (including a general appraisal of the current manufacturing methods).

Visits to Major Tecreel Customers and Users

These visits were arranged in order to get an appreciation of the general conditions of Tecreel usage on forklift trucks. Information was also obtained on feedback of their performance and any new developments in forklift design which might have a bearing on future Tecreel design.

It was observed from the visits that forklift designs varied considerably. It was particularly noticed that there were attempts to design masts using pulley systems instead of reels, on the grounds of supposed greater durability and lower cost. Some designs, including the new German forklifts, are designed to allow the pressure hoses to run over the top of chains, thus in some cases eliminating the need for both Tecreels and pulleys altogether.

However, despite these attempts to design out the Tecreel, a situation could not be foreseen where Tecreels could be eliminated from all types of forklifts, especially on the complex 'triple mast' lifts.

On performance, the general feeling was that Tecalemit Tecreels were preferred to most of the competition. Nonetheless, the desire to ensure that the Tecreel is not made obsolete by attempts to design it out, and the need to increase Tecalemit's market share, should be considered as a good enough reason to continue making the Tecreel even more competitive.

6.3.2 Design and Manufacturing Study

A detailed works cost analysis and subsequent Pareto analysis (see Appendix 8 for breakdown of Pareto analysis) enabled the identification of the high cost components and, most importantly, the source of high cost for each of these components. By concentrating on these high cost sources and in particular, areas which showed potential for significant improvements, the Value Analysis team set out to generate and analyse alternative ideas.

6.3.3 Evaluation of the ideas generated by the VA team

General

During the initial stages of the study, a comparative study of hosereel designs from competitors, as well as other Tecreel types produced by Tecalemit, was carried out with the aim of identifying any cost saving ideas/features from these designs which may be incorporated in the type 375 Tecreel. Many cost saving ideas were already found incorporated in the Type 4 Tecreel. See Figure 6.1 for an exploded view of the Type 4 Tecreel.

Overall, the Type 4 Tecreel is 25% cheaper than the 375 Tecreel. This is mainly because of the improved and simpler design of the Type 4 hub and shaft, which makes it relatively easier to manufacture. In addition, the Type 4 Tecreel has less component parts and is more compact, resulting in substantial savings on material.

In terms of performance, however, the Type 4 Tecreel is relatively inferior to the 375 Tecreel with:

- Lower maximum operating pressure of 170 bar
- Relatively higher pressure drops
- Shorter seal life
- Shorter pull-off length.

The discrepancy in sealing performance is mainly attributable to the type of seals used. 'O' rings are used in Type 4, whereas quad rings have been used on the 375 Tecreel, quad rings provide greater sealing capacities. Also the dimetral compression required is less than for 'O' rings. Less compression means less friction and consequently less wear in dynamic applications.

FIGURE 6.1

Exploded view of the Type 4 Tecreel

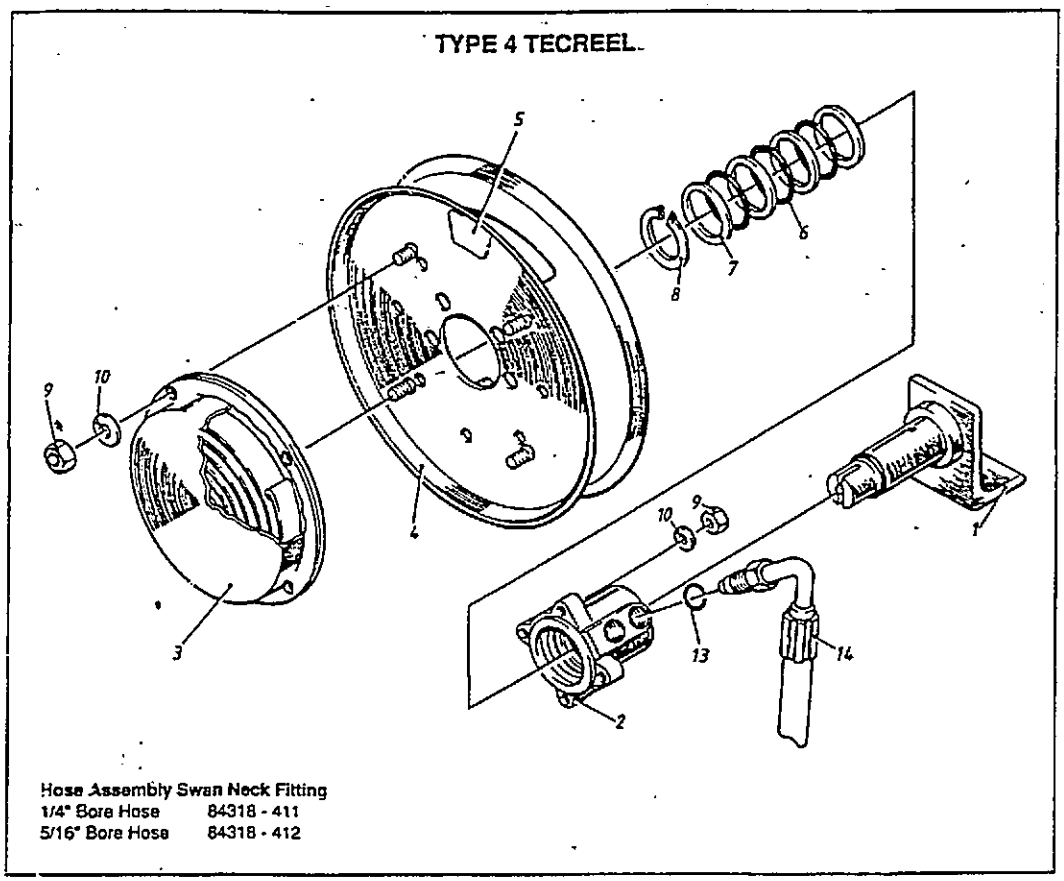

SPARE PARTS LIST

Item	Description	Part No.	Qty.
1	Bracket/Shaft Assembly	84361-402	1
2	Hub	37274-208	1
3	Spring Assembly - RH	84361-400	1
3	Spring Assembly - LH	84361-401	1
4	Flange/Drum Assembly 318 Dia	84361-398	1
4	Flange/Drum Assembly 380 Dia	84361-399	1
5	Label	31838-309	1
6	'O' Ring	25148-317	3
7	Back Up Ring	25117-794	4
8	Circlip	23733-528	1
9	Nyloc Nut - 2BA	21365-048	8
10	Washer	21171-048	8
11	Dustplug 1/4" BSP (not shown)	135352	2
12	Dustplug 3/8" BSP (not shown)	135353	2
13	'O' Ring	25145-107	2
14	Hose Assembly	Various	1

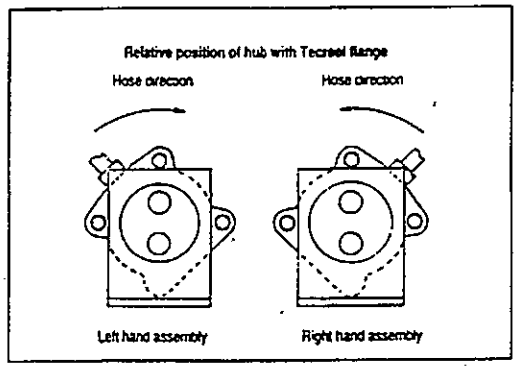

With this philosophy in mind, the first idea was to base the new design around the Type 4 Tecreel by re-designing it to incorporate the improved specification of the 375 Tecreel, such as the use of quad rings for sealing, improving oil flow by increasing the diameter of oil passages, increasing pull-off length etc., thus producing a hybrid Tecreel with the performance of the 375 Tecreel but cheaper. The other advantage of adopting this approach was the possibility of rationalisation, such that some components could be used for both Type 4 and 375 Tecreels, e.g. common hub casting.

From the performance design point of view, the components identified to have the highest scope for change were the hub, shaft and bracket - mounting methods. Because of functional interdependency, design changes on these components had to be considered together in such a way that the final solution was compatible across all the functions and satisfied (or presented reasonable alternative to) customer features.

A summary of cost saving ideas is described below. For a detailed technical and cost analysis see Appendix 7.

Hub

Two alternative, easier to cast symmetrical hub designs, with or without grooves. Design based around Type 4 Tecreel.

Shaft

Four possible alternatives for shaft designs to be compatible with modified hub. Retaining the existing design was also considered.

Reviewing the shaft hardening requirement

Eliminating the need for hardening without compromising the functional requirements by selection of alternative shaft material with adequate initial hardness.

Roller Burnishing

Roller burnishing the shaft after machining could eliminate the hardening, grinding and polishing operations. (See Appendix 9 for technical details).

Use of Hardened Bushes

With use of hardened bushes, press fitted onto a straight shaft to form the grooves and polished surfaces, the hardening, grinding and polishing operations could be eliminated. This idea was dropped after investigation.

Bracket design and mounting considerations

Alternative cost saving designs were considered for mounting the shaft, these included assembly to the shaft using screws or welding.

An investigation also took place into using a zinc die cast bracket.

Spring

New potential suppliers for the spring were located, the spring had been identified as high cost during the pereto analysis exercise.

Spring location pin

An alternative design using bought out components considerably reduced the cost for the location pin.

Tinware

New ideas generated for tinware design included:-

(i) the use of plastic moulded parts
(ii) direct modifications to the existing steel plate tinware.

As (i) required such a radical and, therefore, risky change to present Tecreel policy, a feasibility study was conducted into a futuristic Type 5 Tecreel design. This includes the types of moulding and plastic that can be used and various design configurations with market considerations. (See Appendix 10 for details of the feasibility study).

Other areas investigated for cost saving ideas were as follows:-

(i) Hose end fittings
(ii) Packaging of goods
(iii) Use of plastic ties to assist Tecreel assembly.
(iv) Multiple pressure testing of hub and shaft assemblies.
(v) Easier shot blasting of tinware.
(vi) Cost reductions on packaging material.
(vii) Sub-contracting machining and heat treatment operations.

6.4 Combination of ideas and the reduction process

During the meetings a considerable number of ideas were presented and discussed in detail. The next stage of the design study was to work out suitable combinations of the various ideas to give alternative Tecreel designs. The alternative designs were then subjected to a systemmatic evaluation process to identify the most viable alternative, i.e. the one which satisfies the evaluation criteria in the best possible way.

Hub, shaft, bracket and mounting combinations

Since the proposed changes on the rest of the components, i.e. spring assembly, tinware, fittings etc., are such that they can be realised on any of the basic hub, shaft, bracket and mounting design combination, it was decided (for simplicity) to initially limit the evaluation process to alternative combinations of the later components. Figure 6.2 shows a combination matrix for these components. For example, shaft design S1.2 is compatible with hub design H1, bracket design SB1.2 and mounting method M3.1 etc. In total, there are about 60 possible combinations.

Initial reduction to a workable scheme was based on cost and mounting considerations. Therefore, all combinations involving modified bolted-on steel brackets were dropped because these brackets were more expensive. In fact, the extra cost offset savings made on shaft, thus no advantage was to be gained. Also the existing bolted-on steel bracket was eliminated in favour of a zinc die cast one. The second constraint was that a suitable bracket design should satisfy at least one of the general mounting methods and one of Lansing mounting possibilities.

Thus, combinations which did not satisfy this condition were also eliminated. This left only six viable hub, shaft and mounting bracket combinations, to which the rest of the Tecreel components (incorporating the most promising of the new ideas) were added to give six alternative Tecreel designs. These alternatives, together with their estimated savings, are shown in 6.4.1.

FIGURE 6.2

Hub, Shaft, Bracket and Mounting Combination Matrix

(Refer to Appendix 7 for graphical detail of combinations)

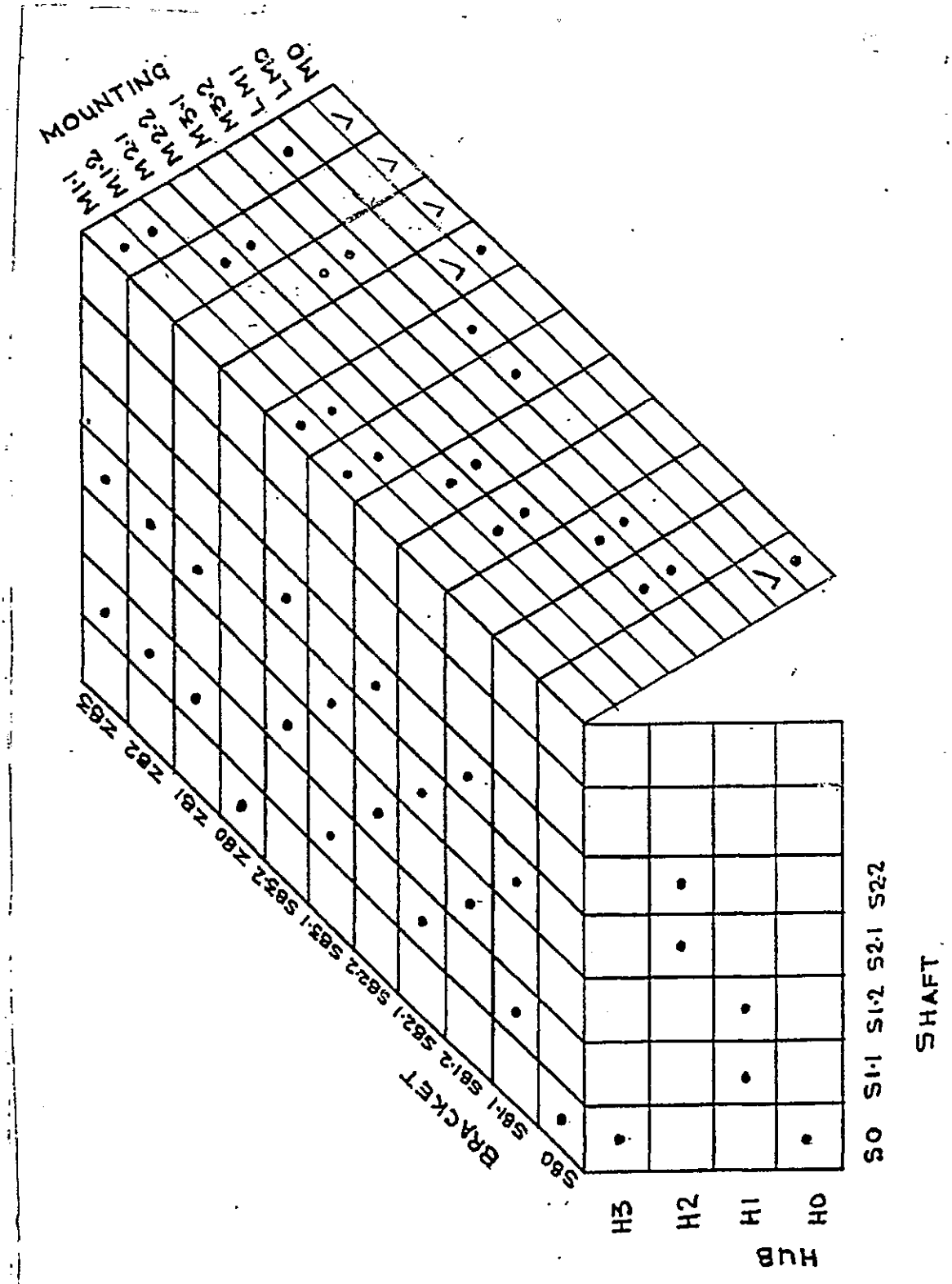

6.4.1 Alternative design combinations for the Tecreel

ALTERNATIVE 1

RETAIN EXISTING DESIGN

- Shaft design SO
- Hub design HO
- Bracket design SBO
- No changes to all other components as well

Savings: £0.00

ALTERNATIVE 2

Proposed Action	Estimated Saving (£)
1. SHAFT	
- Retain existing Shaft design: SO	0.00
- Roller burnish Shaft	2.38
2. HUB	
- Adopt hub design H3	3.84
. Only seal grooves in hub	
3. BRACKET	
- Adopt bracket design ZBO	8.62
. Current bracket in Zinc die cast	
4. SPRING ASSEMBLY	
- Use George Emmot Spring	2.17
- Use dowel pins with self grip Circlips for spring location	0.97
- Use plastic moulded spring can with identical halves	2.52
5. DRUM/FLANGE ASSEMBLY	
- Use welded drum and flange assembly	1.22
6. HOSE END FITTING	
- Similar to Type 4 with swept bend	0.15
7. CARTONS	
- Use plain cardboard cartons with stick-on labels	0.12
TOTAL	21.99

ANNUAL SAVING = 21.99 X 700 X 12 = £184,716

ALTERNATIVE 3.1

Proposed Action	Estimated Saving (£)
1. SHAFT	
- Adopt Shaft design S1.1	1.74
. All grooves in Shaft	
. Suitable for bolted on bracket	
- Roller burnish Shaft	2.38
2. HUB	
- Adopt hub design H1	5.84
. No grooves in hub	
3. BRACKET	
- Adopt bracket design ZB3	6.87
. Zinc die cast and bolted to Shaft with screws	
4. SPRING ASSEMBLY	
- Use George Emmot Spring	2.17
- Use dowel pins with self grip Circlips for spring location	0.97
- Use plastic moulded spring can with identical halves	2.52
5. DRUM/FLANGE ASSEMBLY	
- Use welded drum and flange assembly	1.22
6. HOSE END FITTING	
- Similar to Type 4 with swept bend	0.15
7. CARTONS	
- Use plain cardboard cartons with stick-on labels	0.12
TOTAL	23.98

ANNUAL SAVING = 23.98 X 700 X 12 = £201,432

Tecreel Design: Alternative 3.1

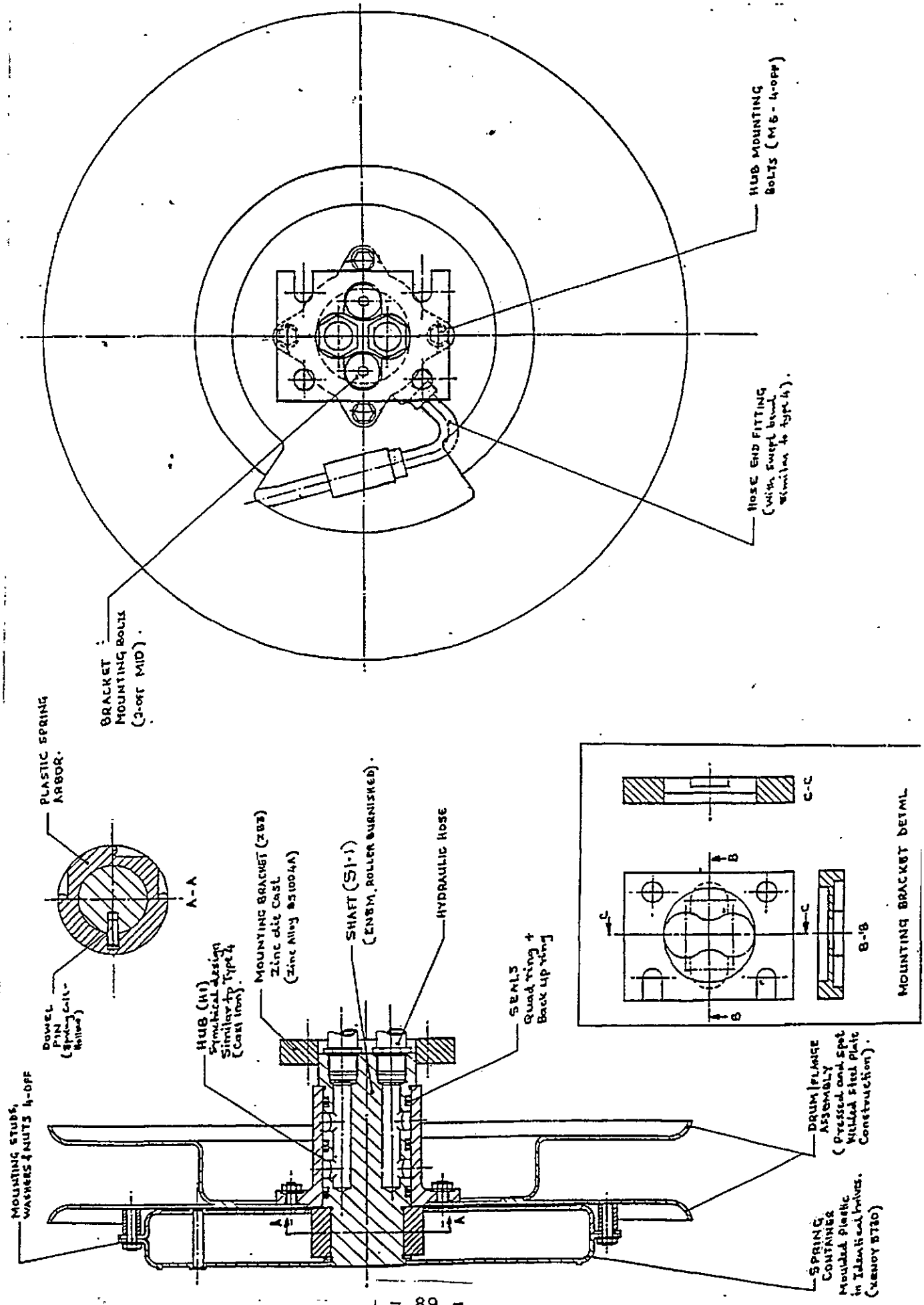

ALTERNATIVE 3.2

Proposed Action	Estimated Savings (£)
1. SHAFT	
- Adopt Shaft design S1.2	1.74
. All grooves in Shaft	
. Suitable for bolted on bracket	
- Roller burnish Shaft	2.38
2. HUB	
- Adopt hub design H1	5.84
. No grooves in hub	
3. BRACKET	
- Adopt bracket design SB3.2	3.61
. Steel bracket secured to shaft by welding	
4. SPRING ASSEMBLY	
- Use George Emmot Spring	2.17
- Use dowel pin with self grip Circlips for spring location	0.97
- Use plastic moulded spring can with identical halves	2.52
5. DRUM/FLANGE ASSEMBLY	
- Use welded drum and flange assembly	1.22
6. HOSE END FITTING	
- Similar to Type 4 with swept bend	0.15
7. CARTONS	
- Use plain cardboard cartons with stick-on labels	0.12
TOTAL	20.72

ANNUAL SAVING = 20.72 X 700 X 12 = £174,048

ALTERNATIVE 4.1

Proposed Action	Estimated Savings (£)
1. SHAFT	
- Adopt Shaft design S2.1	4.73
. No grooves in Shaft	
. Suitable for bolted on bracket	
- Roller burnish Shaft	2.38
2. HUB	
- Adopt hub design H2	2.47
. All grooves in hub	
3. BRACKET	
- Adopt bracket design ZB3	6.87
. Zinc die cast and bolted to shaft with screws	
4. SPRING ASSEMBLY	
- Use George Emmot Spring	2.17
- Use dowel pin with self grip Circlips for spring location	0.97
- Use plastic moulded spring can with identical halves	2.52
5. DRUM/FLANGE ASSEMBLY	
- Use welded drum and flange assembly	1.22
6. HOSE END FITTING	
- Similar to Type 4 with swept bend	0.15
7. CARTONS	
- Use plain cardboard cartons with stick-on labels	0.12
TOTAL	23.60

ANNUAL SAVING = 23.60 X 700 X 12 = £198,240

ALTERNATIVE 4.2

Proposed Action	Estimated Savings (£)
1. SHAFT	
- Adopt Shaft design S2.2	4.73
. No grooves in Shaft	
. Suitable for welded on bracket	
- Roller burnish Shaft	2.38
2. HUB	
- Adopt hub design H2	2.47
. All grooves in hub	
3. BRACKET	
- Adopt bracket design SB3.2	3.61
. Steel bracket secured to shaft by welding	
4. SPRING ASSEMBLY	
- Use George Emmot Spring	2.17
- Use dowel pins with self grip Circlip for spring location	0.97
- Use plastic moulded spring can with identical halves	2.52
5. DRUM/FLANGE ASSEMBLY	
- Use welded drum and flange assembly	1.22
6. HOSE END FITTING	
- Similar to Type 4 with swept bend	0.15
7. CARTONS	
- Use plain cardboard cartons with stick-on labels	0.12
TOTAL	20.34

ANNUAL SAVING = 20.34 X 700 X 12 = £170,856

6.5 Evaluation of the alternative Tecreel designs

The alternative Tecreel designs were further evaluated against a broad range of criteria, using matrix methods coupled with brainstorming and cause and effect analysis, as part of a systemmatic decision-making process.

Two different matrix methods were used:

(a) The qualitative decision matrix (Figure 6.3)

With this method, one of the alternatives is selected as a datum and each of the other alternatives is compared to the datum (in relative terms) as to how it fulfills the evaluation criteria. A series of scores ('+' for better than, '-' for worse than and 'S' for same as) are awarded and the number of +'s, -'s and S's indicate the relative strength of the alternatives.

In this case, two iterations were necessary. In the first iteration (Figure 6.4a), alternative 3.1 and 4.1 seemed to exhibit similar strength. So in the second iteration, alternative 4.1 was selected as datum so that a direct comparison of the two can be made and alternative 3.1 emerged as a clear favourite.

(b) The numerate decision matrix (Figure 6.4)

This method relies on the ability to quantify the degree to which each alternative fulfills the evaluation criteria. It thus requires more detailed designs and accurate cost estimate.

FIGURE 6.3

Qualitative Decision Matrix

(a) First Iteration

CRITERIA \ ALTERNATIVE	1	2	3.1	3.2	4.1	4.2
1. COST SAVING POTENTIAL	-	D	+	-	+	-
2. BENEFIT/IMPROVEMENT TO MANUFACTURE	-	A	+	-	+	-
3. DEVELOPMENT COST	+	T	S	+	S	+
4. DEVELOPMENT RISK	S	U	S	S	S	S
5. RELIABILITY/MAINTAINABILITY	S	M	S	S	S	S
6. EFFECT/ACCEPTABILITY OF CHANGE TO CUSTOMER	+		S	S	S	S
	2+		2+	1+	2+	1+
	2S		4S	3S	4S	3S
	2-		0-	2-	0-	2-

(b) Second Iteration

CRITERIA \ ALTERNATIVE	1	2	3.1	3.2	4.1	4.2
1. COST SAVING POTENTIAL	-	-	+	-	D	-
2. BENEFIT/IMPROVEMENT TO MANUFACTURE	-	-	+	-	A	-
3. DEVELOPMENT COST	+	S	S	+	T	+
4. DEVELOPMENT RISK	S	S	S	S	U	S
5. RELIABILITY/MAINTAINABILITY	S	S	S	S	M	S
6. EFFECT/ACCEPTABILITY OF CHANGE TO CUSTOMER	+	S	S	S		S
	2+	0+	2+	1+		1+
	2S	4S	4S	3S		3S
	2-	2-	0-	2-		2-

CRITERIA	WEIGHT	ALTERNATIVE 1 MARKS	1 POINTS	ALTERNATIVE 2 MARKS	2 POINTS	ALTERNATIVE 3.1 MARKS	3.1 POINTS	ALTERNATIVE 3.2 MARKS	3.2 POINTS	ALTERNATIVE 4.1 MARKS	4.1 POINTS	ALTERNATIVE 4.2 MARKS	4.2 POINTS
1. COST SAVING POTENTIAL	0.35	0.20	.070	0.80	.280	1.00	.350	0.70	.245	0.95	.332	.65	.227
2. BENEFIT/IMPROVEMENT TO MANUFACTURE	0.20	0.30	.060	0.75	.150	0.90	.180	0.70	.140	0.85	.170	0.65	.130
3. DEVELOPMENT COST	0.15	0.70	.105	0.60	.090	0.60	.090	0.65	.097	0.60	.090	0.65	.097
4. DEVELOPMENT RISK	0.10	0.70	.070	0.70	.070	0.70	.070	0.70	.070	0.70	.070	0.70	.070
5. RELIABILITY/MAINTAINABILITY	0.10	0.70	.070	0.70	.070	0.70	.070	0.70	.070	0.70	.070	0.70	.070
6. EFFECT/ACCEPTABILITY OF CHANGE TO CUSTOMER	0.10	0.80	.080	0.80	.080	0.70	.070	0.70	.070	0.70	.070	0.70	.070
TOTAL	1.00		.455		.740		.830		.692		.802		.664

FIGURE 6.4
The Numerate Decision Matrix

SLIDING SCALE FOR AWARDING MARKS

0.1 - Useless
0.2 - Close to Useless
0.3 - Poor
0.4 - Below Average
0.5 - Average
0.6 - Better than Average
0.7 - Good
0.8 - Very Good
0.9 - Excellent
1.0 - Perfect (ideal solution)

With this method, each criteria is assigned a weight, depending on its relative importance in attaining the overall objective. In this case, more weight was attached to cost. The alternatives are then awarded marks on a sliding scale, depending on how they fulfill each criterion. The marks are then multiplied with the respective weights to give points and the total points for each alternative across the whole range of criteria indicates its strength. Using this method, the alternative could be ranged according to their relative strength and the following ranking resulted:

1. Alternative 3.1
2. Alternative 4.1
3. Alternative 2
4. Alternative 3.2
5. Alternative 4.2
6. Alternative 1

6.6 Conclusions from the evaluation process

The following conclusions were drawn:

Alternative 3.1, which has emerged as a clear favourite, involves some changes to the tecreel mounting method. the available mounting options have already been discussed in detail in Appendix 7. A similar situation applies to alternative 4.1 which has emerged as second best.

Therefore, before any of these two options can finally be adopted for implementation, a detailed survey of the customers would have to be carried out to gauge the market reaction to the proposed changes.

The main difference between 3.1 and 4.1 is that in the former all grooves are on the shaft, while in the latter all grooves are in the hub. The small difference in saving between the two (£0.38 in favour of 3.1) probably reflects the relative difficulty of machining the grooves in the hub. While the idea of having all grooves in the hub has been successfully tested on the Type 4 Tecreel, the idea of having all grooves on the shaft had not been tested before. Therefore, a fair comparison as to whether either of the ideas is better than the other can only be made after both ideas have been tested. At the moment there is no evidence to suggest so, and in the event this is proved to be true, then a decision will have to be based on benefit to manufacture.

One of the considerations will have to be the suitability for roller burnishing (if successful) of a straight and grooved shaft.

In the event that the Tecreel customers resist any changes on their part (particularly with regard to the mounting), then alternative 2, which has emerged third best, will be the obvious choice, despite being slightly more expensive.

In the calculation of saving estimates, it has been assumed that the proposed measures, when implemented, will not result in unutilised spare labour and machine capacity, that is more work will be available to fill the gap and the budgeted contribution to overhead costs will be recovered or the excess capacity (if any) will be eliminated. In practice, this assumption is unlikely to be strictly true, in which case it would be realistic to assume that only 50% of the 'saved' overheads will be recovered. From the cost analysis, it can be shown that on average the overheads contributes approximately 60% of the works cost. Therefore, to be on the safe side, the estimated total savings per Tecreel might have to be adjusted downwards by up to 30% to make them more realistic.

6.7 Proposed Implementation Plan

Taking into account the time required to verify the suitability of the various ideas and the level of investment required to implement the ideas, a gradual implementation plan in four phases is proposed.

Ideas for immediate implementation

Ideas under this phase can be implemented immediately. No tests or capital investment is required:

	Idea	Annual saving (3)
1.	Use of plastic cable ties - this idea is already being implemented.	3,024
2.	Use of plain cardboard cartons	2,100
3.	Subcontract (a) Hardening of shaft	4,368
	(b) Turning of hub and shaft	17,724
		27,216

Ideas for short term implementation (3 months)

Ideas under this phase can be implemented within two months. No investment required.

	Idea	Annual saving (£)
1.	Spring location pin - use plain dowel with self grip circlips. Samples have already been received.	7,560
2.	Spot weld drum and flange - needs modification to the welding jig and more tests.	10,248
	TOTAL	17,808

Ideas for medium term implementation (up to six months)

It is hoped that tests to verify the ideas under this phase can be completed within three to six months.

	Idea	Annual saving (£)
1.	Roller burnish shaft without hardening - tests are expected to take three months.	20,000
2.	Use of zinc die cast bracket - tests are expected to take up to five months.	50,000
3.	Use George Emmot spring.	18,228
	TOTAL	88,228

The following investment in tooling will have to be made

- Roller burnishers: £700
- Die cast tooling: between £7,000 and £18,500.

Thus, the total tooling investment for this phase will range from £7,700 to £19,200, depending on the selected die caster.

Ideas for long term implementation (up to 12 months)

The ideas under this phase can be described as more futuristic in nature and will take longer to implement. Outstanding work includes:

- Completion of detailed working drawings
- Development of tooling
- Manufacturing the hardware
- Verification tests and
- A market survey to assess the reaction to the proposed ideas.

Idea	Annual saving (£)
1. Re-design hub and shaft based around Type 4 Tecreel	43,680 to 60,480
2. Either carry out direct modifications to existing steel tinware:	
- Pressed spring can in identical halves	1,764
or replace tinware with plastic parts:	
- Plastic spring cover in identical halves	21,168
- Plastic flanges in identical halves with a horseshoe centre	25,788
	92,400 to 109,200

The following investment in tooling cost will have to be made:

- Press tool	£5,000
- Injection moulding tooling	
(a) Spring can	£7,000
(b) Drum and flange assembly	£28,000
- New casting pattern	£3,000

Thus, the total tooling investment for this phase will range between £8,000 and £38,000, depending on which idea is adopted to replace existing tinware.

6.8 Summary

Implementation of ideas up to phase 3, i.e. medium term, will result in an annual saving of £128,889. This is equivalent to 90% of the target value. The maximum investment to achieve these results is estimated to be £20,000.

Depending on which additional ideas are implemented from the long term phase, the annual saving will rise to between a minimum of £174,228 and a maximum of £236,320. This would be in excess of the target saving by between 12% and 65%. The additional investment required to achieve these results would be approximately £10,000 for the minimum and £40,000 for the maximum.

The maximum total investment to complete all phases is estimated at £60,000, i.e. approximately £58,000 for new tooling and £2,000 for other development work.

6.9 Concluding Remarks

Most of the proposals presented by the VA study are already in the process of being implemented and tests for those still needing verification are continuing. These include all ideas up to the medium term implementation phase, with the exception of subcontracting of machining operations on the hub (for control reasons).

The ideas suggested for long term implementation are more futuristic in nature and requires the involvement of the customers for their success. These ideas will be implemented gradually as part of the futuristic Type 5 Tecreel as and when the market conditions and the necessary development work permit their introduction.

It is hoped that the careful consideration given to the many aspects of the Tecreel design and manufacturing methods will greatly help in improving its profitability and competitiveness.

CHAPTER 7

CELL REVIEW AFTER JIT IMPLEMENTATION PROJECT

7.1 Introduction

This chapter forms the conclusions to the graphical data presented in Chapter 2. The data analysed in this chapter illustrates a before and after JIT implementation. Chapter 2 represents data up to the end of 1989, this chapter continues the cell measurement as far as possible in the timescale allowed for the project, ending in period 5, 1991.

The five parameters compared were:-

(i) Average production rate (see Figure 7.1)

(ii) Average man hours per Tecreel (see Figure 7.2)

(iii) Average hosing up, swivels and returns (see Figure 7.3)

(iv) Average value of stock (see Figure 7.4)

(v) Average stock production ratio (see Figure 7.5).

All graphs were averaged over three or six periods. Each year consists of thirteen equal periods, except for twelve in the final year. The working days within a period varies from thirteen to twenty-five, depending on holidays. For the purpose of data correlation, all periods have been adjusted to represent twenty working days.

7.2 Analysis of graphs

7.2.1 Average production

Average production rate (see Figure 7.1) was taken over three and a half years, the three period monthly average being represented by the blocked line and the six period monthly average being represented by the single line. The average time taken for each Tecreel build represented all variations of Tecreels built in each period.

The production figures show a marked recessional decline, the main effect of the recession appears to have started around period 8, 1990. An average of 850 reels per period reduced to approximately 650; and since period 5, 1991, production has declined further still. This decline represents a 23.5% drop in production since the plant move. The recessional fall was blamed on a worldwide reduction in forklift truck manufacture. Unfortunately, this trend reduced the effectiveness of JIT improvements that had been accomplished in the production line. The teachings of Taiichi Ohno highlighted the fact that "productivity and productive output are linked in an unseverable cause-and-effect relationship. A rise in output often means an increase in productivity. I think we would all agree that it is extraordinarily difficult to raise productivity in the face of declining output"[88].

7.2.2 Average man hours per Tecreel

Average man hours (see figure 7.2) was again taken over three and a half years, the three period monthly average being represented by the blocked line and the six period monthly average being represented by the single line. The data was collected using total attendance hours, and dividing this by the total number of Tecreels produced.

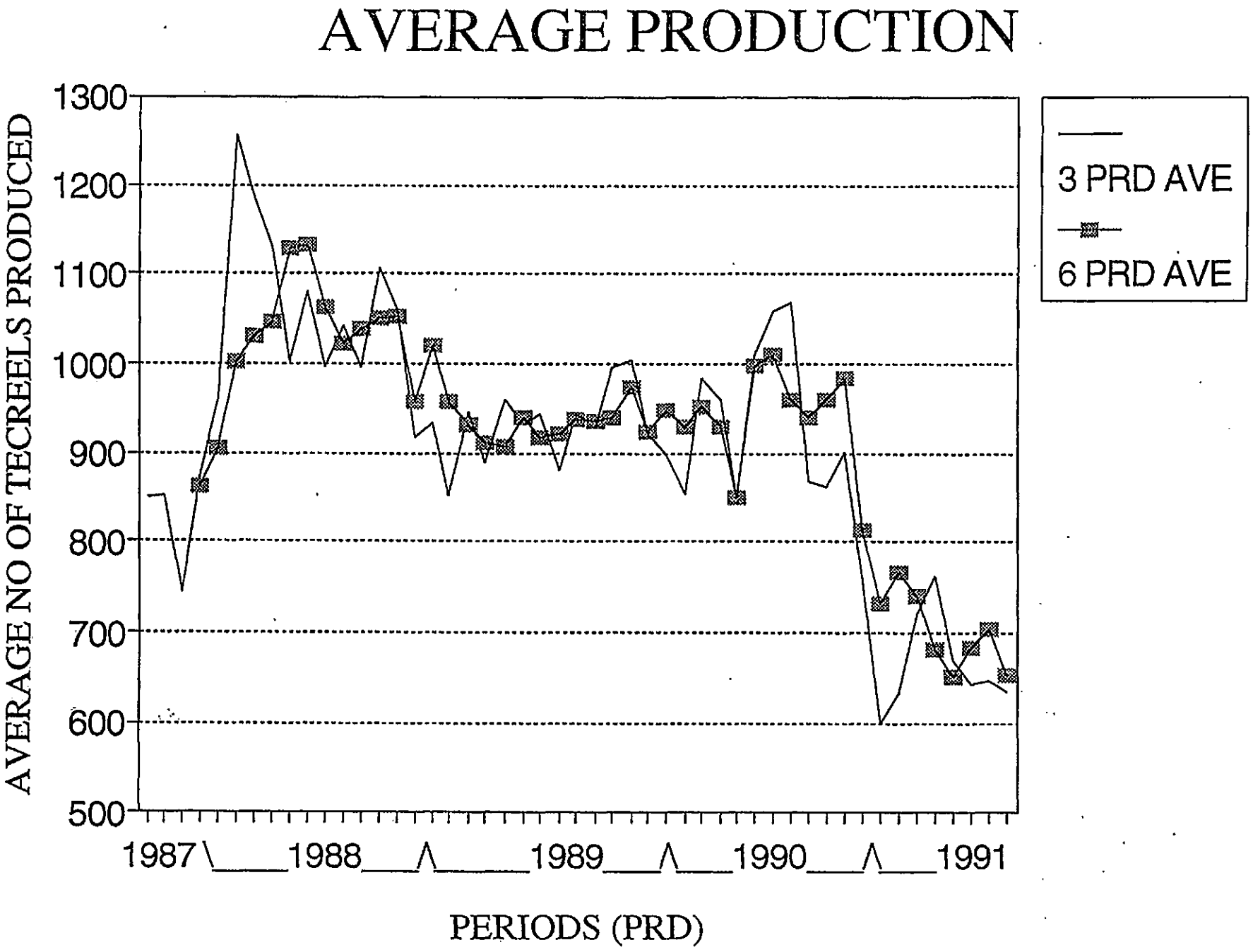

FIGURE 7.1
Showing average production rate over 3.5 years

The average man hours displayed a good trend immediately after the plant move in period 5, 1989, reducing from approximately 95 minutes to 84 minutes. However, it appears fairly clear that as the recession began to bite, the man hours steadily increased to approximately 138 minutes. This is despite a reduction in the workforce of eleven to nine personnel after the move and also the removal of a nightshift worker to prevent the company opening out of work hours.

A system was arranged where the two sprayers who normaly work alternate shifts both shared the workload simultaneously during the day. This reduced buffer stock to a minimum.

Although a disappointing result, the wildly fluctuating workload led to inefficient deployment of the workforce which could not be rectified by redeployment in other areas. Frequent movement of staff can be self-defeating. Some useful output of this spare labour, however, was utilised on Tecreel warranty claims.

7.2.3 Average hosing up, swivels and returns

Average hosing up, swivels and returns (see Figure 7.3) was analysed over three and a half years. It was no surprise that as the recession began to take its toll, swivel production dropped dramatically from a peak of 880 to below 300 units per month, swivel production normally suffered from fairly violent fluctuations. However, in period 5, 1990, it was the first time since the data collection had started that swivel production dropped below the number of reels being hosed up.

Hosing up displayed a relatively stable trend through the recessional period, this is most likely due to OEMs, such as Lansing Linde Limited, who require hosing up, keeping order books relatively stable.

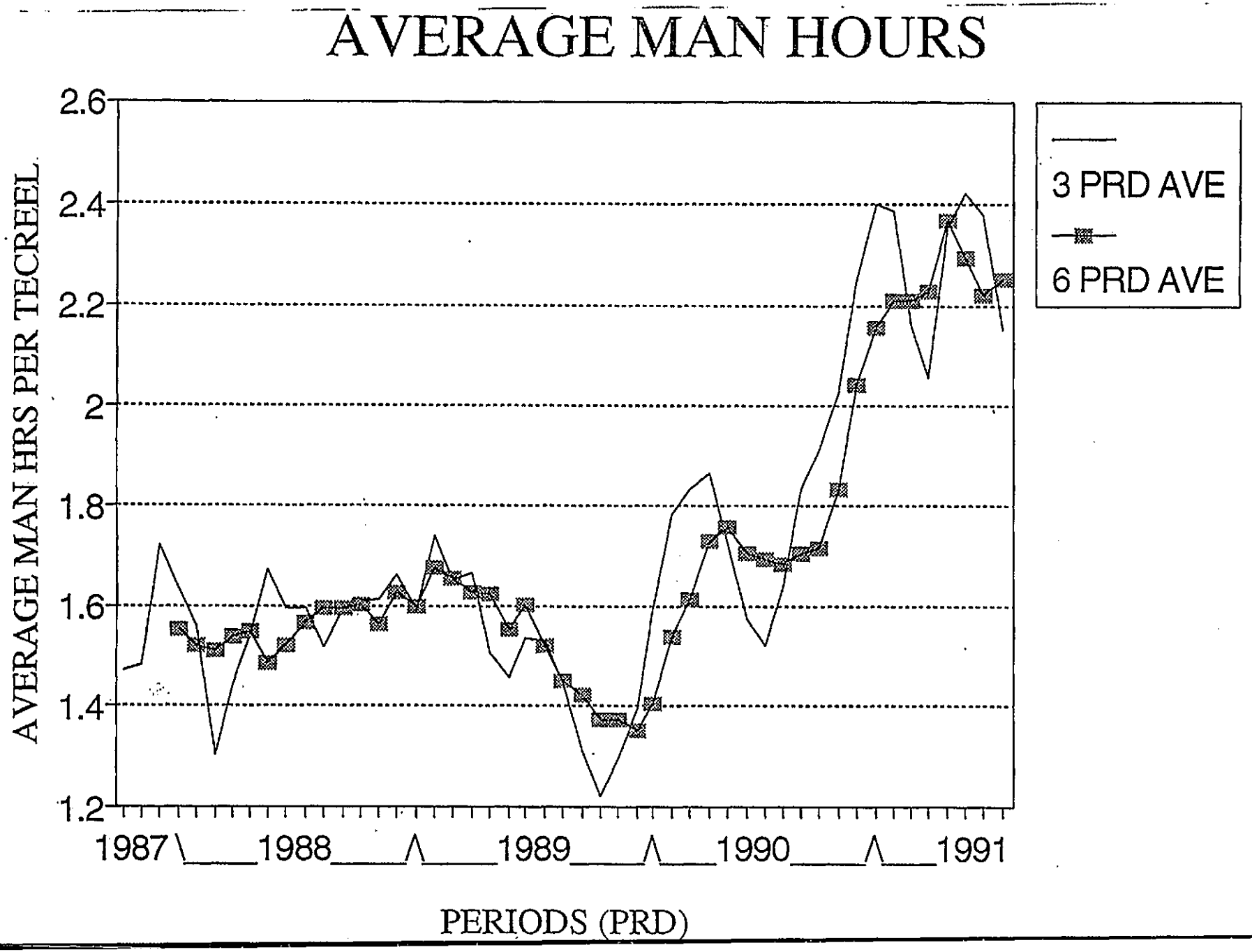

FIGURE 7.2
Showing average man hours over 3.5 years

The graph does show a marked rise in hosereel warranty work towards the end of data collection, this was not due to quality problems, but an indication of the number of warranty claims now being serviced. The recession had resulted in spare time for some of the operatives, enabling them to clear the backlog of warranty claims, some of several years' standing. The long term objective of JIT techniques would be to eliminate warranty claims altogether.

7.2.4 Value of stock

Average value of stock (see Figure 7.4) proved difficult to analyse after the plant move, 'stock value at standard cost' reports had previously been produced with the use of the MRP system.

With the Kanban system replacing this, the only accurate method of assessing the stock value was a manual stock check; this is both expensive and disruptive and, for this reason, two further points are plotted on the graph after the plant move. The two stock checks were taken in December 1990 and August 1991.

A very positive trend appeared after the plant move, with stock levels dropping to under £100k, this is impressive progress, considering two years previously stock value had peaked at over £168k. The final stock check revealed a rise to £124k. A reason given for this change was that a settling down period was necessary after the move, many shortages had occurred particularly with in-house manufactured components and stocks had been increased slightly to avoid disrupting production. Manufactured components increased from £19k to £33k.

An encouraging sign of the stock reduction programme had been the visual reduction of storage space used. Overall the plant move had saved 205 square metres (25% reduction).

FIGURE 7.3

Showing average hosing up, swivels and returns over 3.5 years

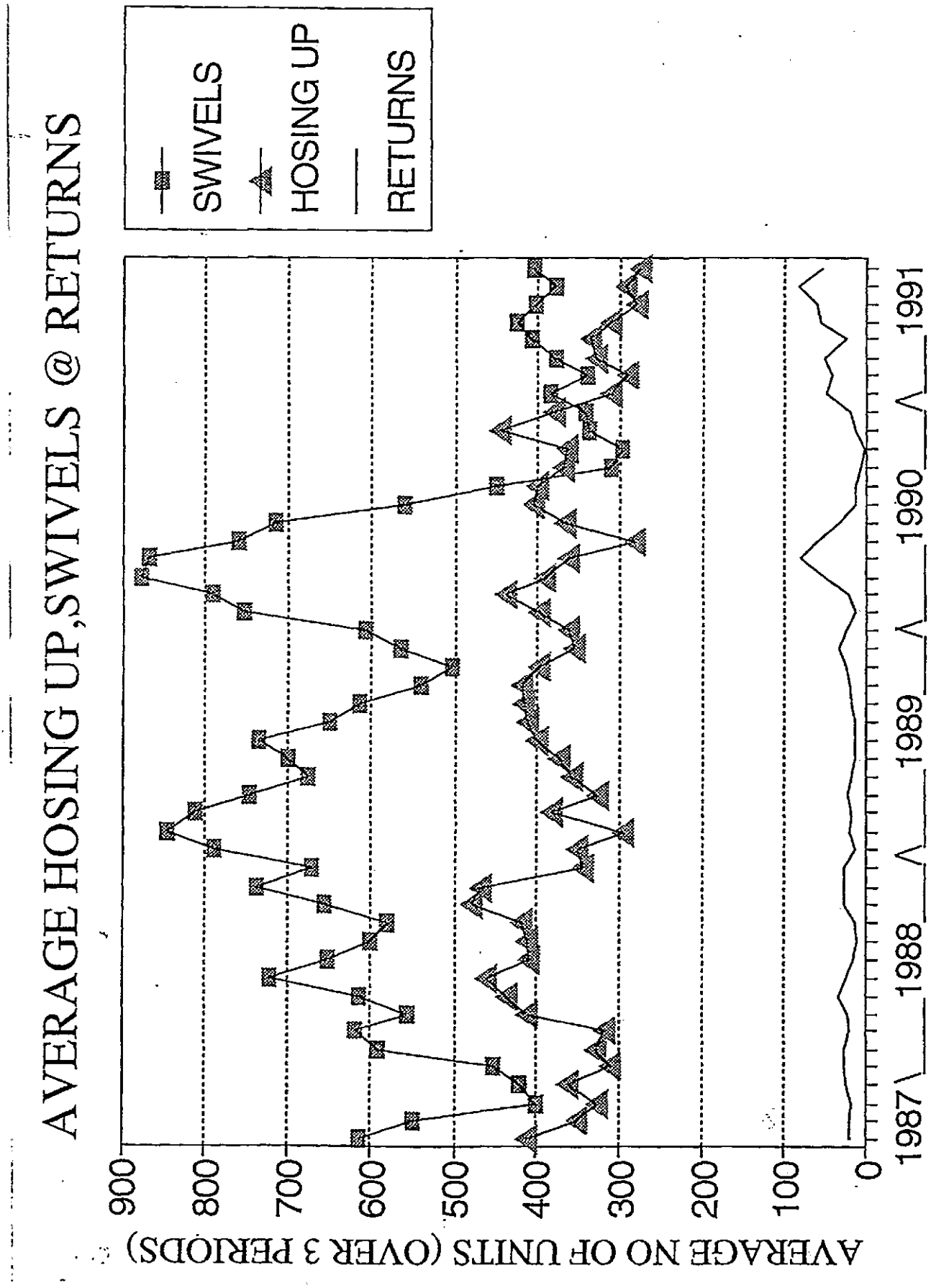

FIGURE 7.4

Showing average value of stock over 3.5 years

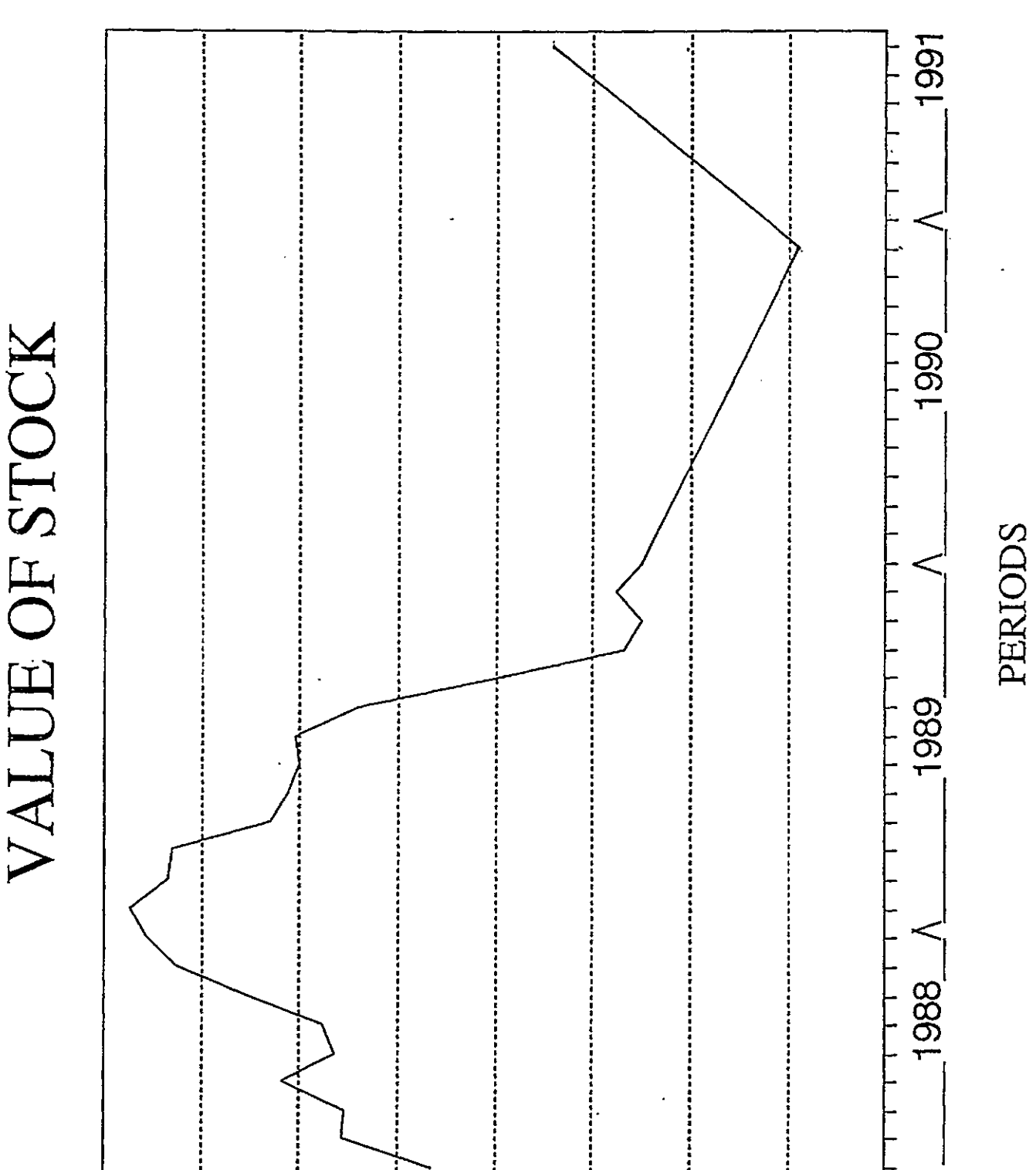

7.2.5 Stock production ratio

The stock per production ratio graph, representing a period of 3.5 years, can be seen in Figure 7.5. An eleven-month stable period followed the plant move, however, towards the end of the project a marked rise can be seen. A heavy fall-off in orders, coupled with the need to set higher and more realistic stock levels, has grossly distorted the results. It should be noted that the graph proved as difficult to analyse as the previous value of stock, for only two further points could be plotted on the graph after the plant move. An averaged result may not have produced such a steep rise.

The increasing ratio does indicate, however, if orders improve there is likely to be an equally dramatic adjustment of this high value. It is possible to project a stock production ratio based on an average production of 900 units/month, coupled with the proposed stock level of £124k at 140.

FIGURE 7.5

Showing the value of stock
divided by the production rate over 3.5 years

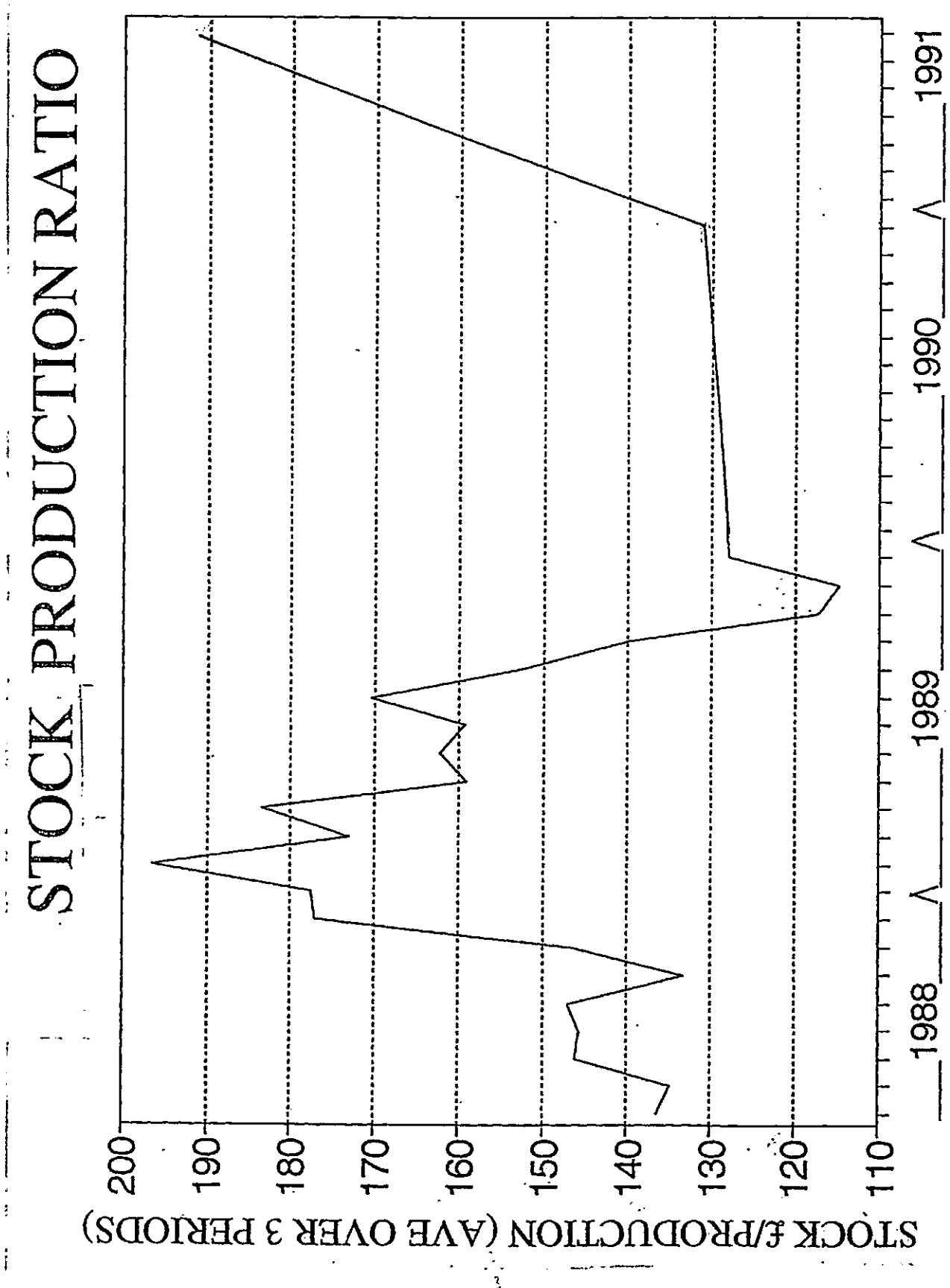

7.3 Comparison of results with other JIT company implementations

Research data was collated from other studies conducted on UK and USA companies implementing JIT. The data covers three separate studies(70)(71)(72) involving over 290 replies from over 1,900 questionnaire enquiries.

The results are displayed in tabular form for ease of comparison. In each study the performance measurement relative to (or as near as) the actual project parameter was selected for comparison;

Survey 1

Improvements above original level realised on JIT Implementation:-

	Zero	<25%	26-50%	51-75%	>75%	Missing
Inventory	4	36	36	23	8	7
Workspace	14	50	29	12	0	9
Quality	12	49	18	14	5	16

FIGURE 7.6

Showing results of JIT survey by Anthony et al 1991[70]

Survey 2

		Essential (% response)			Not Used	
		A	B	C	D	E
Inventory Value	UK	45	36	14	2	3
	US	48	31	16	2	3
Space Utilisation	UK	11	13	19	23	34
	US	13	24	31	21	11
Quality Costs	UK	39	28	14	12	7
	US	37	30	15	8	10

FIGURE 7.7

Showing results of JIT survey by Billesbach et al (1991)[71]

Survey 3

Benefits from Cellular Manufacturing:-

	Average Improvement
Reduction in WIP inventory	19.4%
Reduction in space	16.2%
Quality improvements	15%
Throughput time reduction	24.3%

Of 32 companies surveyed, 25 had manned rather than automated cells.

FIGURE 7.8

Showing results of JIT survey by Wemmerlov and Hyer 1989[72]

Comparison of project results with Survey 1

Inventory; The highest number of responses were split between <25% and 26-50%, Tecreel's reduction of 25% was, therefore, in line with the industrial median of this survey's measurement.

Workspace; The highest number of responses lie within the <25% category, Tecreel's reduction of 25% was, therefore, slightly better than the survey's result.

Quality; Due to the large backlog of warranty claims being serviced during the project, it was not feasible to use percentage comparisons with the survey. Future measurement should provide a more accurate comparison. However, with the SPC and Quality Control techniques in place and reviewed regularly, the improvement would be expected to better <25%.

Comparison of project results with Survey 2

Inventory Value; The survey indicated 45% of UK and 48% of US participating companies thought this area most essential, this project also considered inventory value reduction as an essential area to improve.

Space Utilisation; The survey's result indicates that companies in the UK found space saving not so important as companies in the US. The new flowline offered a useful space reduction in a company already cramped for floor area.

Quality Costs; These appeared high on the priority list for companies both in the UK and US, this was in agreement with the high level of quality control implemented in Tecreel's flowline.

Comparison of project results with Survey 3

Reduction in WIP inventory; Tecreel's inventory measurement did not quantify work in progress compared to total inventory. However, with the balanced flowline workstations and considerably reduced WIP, Tecreel possibly exceeded the survey's results of 19.4%.

Reduction in space; The survey indicated less improvement (16.2%) than that of Tecreel's space reduction of 25%.

Quality improvements; For reasons mentioned before, the Tecreel would be expected to equal, if not improve on, the 25% average improvement.

Throughput time reduction; The indicated result of 24.3% was below that of Tecreel's improvement of 33%.

The survey also recorded that out of 32 companies, 25 operated manned-only cells, rather than automated, this again was a preferred option for Tecreel manufacture.

CHAPTER 8

OVERALL CONCLUSIONS AND RECOMMENDATIONS

8.1 Conclusions and Recommendations

The project results showed that a JIT approach to production processes can offer some very real benefits in a small engineering company environment.

Overall benefits at project completion were:-

- Tecreel stock levels reduced by 25%.
- Shop floor area reduced by 205 square metres (25% reduction).
- Lead time reduced by 33%.
- Large arrear in orders virtually elimnated six weeks after cell implementation.
- Turn around time on warranty claims greatly reduced.
- Quality control brought into the cell, increased quality awareness.
- Cross-training of operatives improved versatility.

Whilst it would be incorrect to claim that a complete JIT global management philosophy was implemented, the seeds were sown for the company to progress in this direction.

The elimination of waste through group problem solving and the implementation of the Kanban 2 card system proved particularly beneficial. With commitment to implement the documented solutions and quality improvements within this thesis and careful vigilance of Kanban, further substantial improvements should be made. It should also be noted that the thesis was conducted during the worst post-war recession for the UK manufacturing industry. This inhibited the will of the company to pursue any new ventures involving capital expenditure.

The research process was hindered by the poor management information systems, these require considerable improvement for the company to fully assess the blenefit of cost-cutting exercises in the future.

A recommended ideal implementation plan is discussed later in this chapter. It is, however, easy with hindsight to see some shortcomings in the way JIT was applied in this project.

Some relevant observations and recommendations for improvement are listed below:-

- Kanban; Workforce was slow to realise the importance of returning Kanban cards, resulting in shortages. More training in this area would have helped.

  Kanban proved relatively easy to implement and was readily accepted by the workforce.

  Kanban was a positive step forwards for the Tecreel cell and showed vast improvements on the MRP system in stock and production control.

- Quality; By integrating inspection/testing in the production line, the quality awareness of the operatives improved.

  Tecreel quality problems before JIT implementation appeared to be reactive not pro-active, i.e. quality investigations were previously as a result of customer complaints.

  FMEA - lessons learned by applying FMEA to the Tecreel could easily be applied to other company products. FMEA was applied to another company's product upon Tecreel's completion.

Knowledge gained from Tecreel's FMEA was utilised during this process and computer software purchased to aid future FMEA investigations.

- Production; Training programmes are needed to cross-train shop floor operatives. JIT will not succeed unless operatives fully understand the range of manufacturing tasks. This training should extend throughout the entire factory.

Compulsory suggestion schemes have been highly successful within JIT environments, but would have proved difficult to implement in this case if not applied universally throughout the factory. Reward should be through managerial and financial recognition.

Unexpected shortage problems were experienced with in-house manufactured components, such as machining hubs and shafts. A possible solution to this is to treat the in-house supplier in the same manner as an external supplier.

A future improvement to the flow of work within the cell could be achieved by the use of either a carousel or gravity conveyor. Tecreel assemblies and sub assemblies consisted of bulky and heavy components requiring considerable movement between spider trolleys, this was wasteful in both time and effort.

Analysis of the graphs indicates if Tecreel orders had been maintained at their original level or increased, the benefits of the JIT system would be more apparent. Increasing orders do not necessarily result in increased Kanban stock levels, and are likely to result with a positive effect on the stock production ratio. Whilst Kanban levels were maintained and adjusted to take account of a reduction in demand, this takes time to affect the results. It may be possible to offer a price reduction on presumption of increased orders.

Although falling sales prevented full utilisation of the production staff, this 'spare time' could be utilised wisely, either by further cross training of the workforce or improving quality through operative suggest schemes. (This has been accomplished in JIT factories by allowing one operative to observe another at work and offer suggestions for improvement.)

- Value Analysis; If nothing else, Value Analysis offers an excellent method of presenting ingenious solutions to senior management, which would otherwise have been lost in day-to-day company business. In this case VA provided a very real saving for the company.

VA can be used to compliment JIT. This traditional methodology is more popular with British management for its ease of implementation and more rapid results. British management should concentrate, however, on both issues to succeed.

Many recommendations from the engineering department, such as using buffing machining to reduce ovality in the shafts, were not feasible at the time, due to financial restrictions. Such ideas should be properly filed to prevent repeating the learning process at a later date.

- Management; When quality competed against price, invariably quality was sacrificed. Poor quality parts result in production line disruption.

Changing site assisted the implementation of JIT, but resulted in an unsettling effect for the transferred workforce.

JIT gains are hard to come by and very easily lost. Vigilant supervision of implemented systems is necessary, particularly in areas such as Kanban.

8.2 Futuristic ideal implementation plan for a JIT manufacturing cell

This project demonstrated that despite falling sales, JIT can still be successfully implemented into an existing product range.

Given time and a sizeable budget, a futuristic ideal JIT manufacturing cell may take the form of the following critical areas and timescales.

(i) Management Support

Before JIT reaches middle management or shopfloor grades, there has to be total commitment from the company's board for JIT to stand a chance of succeeding. JIT is very much a "top down" directive and "bottom up" implemented operation. With this support it should be possible to 'design' and implement a suitable Performance Measurement System[69].

(ii) Supplier Development

This could be considered in the initial stage of JIT development. Sourcing of all components should be investigated and suppliers made aware of the company's intentions and requirements. Particular emphasis should be placed on the consequences of late deliveries.

(iii) Workforce Training (Total Employee Involvement)

In preparation of JIT implementation, the workforce requires to be educated in JIT methodology, with key emphasis on flexibility, these should include training films and company visits. It should be pointed out that cross training, far from being a treadmill, will create interest and benefits for the employees' future. Significant contributions by employees should be publicly acknowledged and recommended.

(iv) Group Technology Layouts

During the second phase of implementation, the cell layout needs careful consideration. This will require detailed planning and involve full participation of the operatives. Directives in this area should depend upon Kanban inventory control, flowline balancing and set up reductions etc.

(v) Kanban

A study of component type and range should soon establish whether Kanban in its entirety or part can be operated. Once decided, the operation of the chosen inventory control system should be explained thoroughly to the operatives. With the flowline layout now in place, it should be possible to see how the physical operation of the system will take place.

(vi) Total Quality Management

This should be included in the final stage of implementation. If correctly set up, the JIT system will soon reveal quality problems. The shift from traditional quality inspection will take considerable time and training. The financial rewards and satisfaction for successful implementation, however, are very high.

(vii) Progress Review

The final implementation stage is an ongoing process. Constant improvements are required to keep the product competitive. These may take the form of quality circles, suggestion schemes, set up reductions, inventory control review, value analysis/value engineering and FMEA teams.

Since the beginning of the thesis, attitudes towards JIT have strengthened and a steady investment in the UK by Japanese manufacturers has promoted the JIT image. The relatively small JIT project at Tecalemit revealed some real benefits and paved the way ahead for future improvements.

REFERENCES

1. R.H. Hewitt
   Managing into the '90s, Just in Time.
   Department of Trade and Industry, Underhill (Plymouth) Limited 1989.

2. A.T. Kearney
   "Target"
   Association for Manufacturing Excellence Inc. (AME)
   Spring/Summer 1988

3. J. Bicheno
   34 for Quality - A Guide to 8 Gurus, 7 Tools, 7 Wastes, 12 Techniques.
   PICSIE Books, 1991.

4. E.J. Hay
   "Any machine set-up time can be reduced by 75%"
   I.Mech.E., Hal Mather, November 1990.

5. B. Maskell
   Just-in-Time.
   APICS, Technical Development Paper 29, March 1984.

6. J.L. Burbidge
   "Comparisons of Kanban and Other Production Control Systems"
   Institute of Production Control, September 1982.

7. J.L. Burbidge
   Principles of Production Control
   McDonald and Evans, 1978

8. R.A. Esparrago
   "Kanban".
   Production and Inventory Management Journal, First Quarter, 1988.

9. C.J. McMillan
The Japanese Industrial System.
Walter de Gruyter, N.Y., Page 214, 1985.

10. H. Challis
"Manufacturing - Alright, but how's it done"
Engineers' Digest, 1989.

11. R.W. Hall
Driving The Productivity Machine: Production Planning and Control in Japan.
APICS, Falls Church, VA, Pages 43-45, 1981.

12. R.J. Schronberger
Japanese Manufacturing Techniques.
The Free Press, N.Y., Pages 227-233, 1982.

13. C.A. Voss
"Two sides of the JIT coin - Japan and UK"
CME, April 1988.

14. K.H. Hannah
Just-in-Time: Meeting the competitive challenge.
Production And Inventory Management, Third Quarter, 1987.

15. C.A. Voss
Just-in-Time Manufacture.
IFS (Publications) Ltd, UK, 1987.

16. W.E. Deming
Out of the Crisis.
Massachusetts : MIT, Center for Advanced Engineering Study.
Cambridge University Press, 1986.

17. A. Sayer
"New developments in manufacturing: the just-in-time system".
Capital & Class 28-30, Winter 1986.

18. H Challis
"JIT take-up balked by company culture"
The Institute of Mechanical Engineers, Engineering News, December 1990.

19. G. Plenert
An Overview of JIT.
The International Journal of Advanced Manufacturing Technology, Volume 8, pages 91-95, 1993.

20. K. Suzaki
"The application of Japanese competitive methods to US manufacturing".
Journal of Business Strategy, Pages 10-19, Winter 1985.

21. D. Winter
"Just-in-Time works!"
Production, January 1984.

22. Anon
"Feeling warm and fuzzy about just-in-time"
Journal of Packaging, Vol. 38, Iss. 2, P.49, 1993.

23. R. Kaplan
Measuring Manufacturing Performance, A New Challenge for Managerial Accounting Research.
The Accounting Review, Pages 686-795, October 1988.

24. J.A. Hendricks
Performance measures for a JIT manufacturer: The role of the IE.
Industrial Engineering, Vol 26, Issue 1, January 1994.

25. B. Clark, L. Mia
JIT Manufacturing Systems:- Use of Application in Australia.
International Journal of Operations and Production Management, Vol 13, No 7, Pages 69-82, 1993.

26. Bhimani, Bromwich
Accounting for Just-in-Time Manufacturing Systems.
CMA Magazine, Pages 31-34, February 1991.

27. G. Foster, G. Horgren
Cost Accounting and Cost Management in a JIT Environment.
Journal of Cost Management, Pages 4-14, Winter 1988.

28. A. Dear
Working Towards Just-in-Time.
Kogan Page, London, Page 114, 1988.

29. E.A. Everett, R.J. Ebert, J.R. Adam
Production & Operations Management - Concept, Models & Behaviour.
Prentice-Hall International Edition, Page 312, 1978.

30. J. Kilner
The Application of JIT in manufacturing.
PERA Training, Melton Mowbray, 1991.

31. N.L. Hyer, V. Wemmerlov
Group Technology and Productivity.
Harvard Business Review, Pages 141-149, July-August 1984.

32. Y. Mondon
Toyota Production System.
Industrial Engineering and Management Press, Norcross, Georgia, 1983.

33. L. Heiko
A Simple Framework for Understanding JIT.
Production and Inventory Management Journal, Pages 61-63, Fourth Quarter, 1989.

34. T. Ohno
Toyota Production System: Beyond Large Scale Production.
Productivity Press, Cambridge, 1988.

35. M. Ebrahimpour, B.M. Fathi
Dynamic Simulation of a Kanban Productivity System.
International Journal of Operations and Production Management, Vol 5, No 1, Pages 5-14, 1985.

36. B.J. Schroer, J.T. Black, S.X. Zhang
Just-in-Time with Kanban Manufacturing System Simulation on a Micro-computer.
Simulation, Vol 45, No 2, Pages 52-70, 1985.

37. G. Fellers
Use of GPSS/PC to Establish Manning Level of Proposed Just-in-Time Production Facility.
Computers and Industrial Engineering, Vol 11, Pages 382-384, 1984.

38. T.J. Shriber
Simulation Using GPSS.
John Wiley, New York, 1974.

39. J. Bessant
Managing Advanced Manufacturing Technology.
NCC/Blackwell, Oxford, 1991.

40. J. Wheeler
The Evaluation of Intangible Benefits with the introduction of New Technology.
Centre for Business Research, Brighton Business School, Brighton Polytechnic, 1988.

41. S.P.P. Flapper, G.J. Mittenburg, J. Wyngaard
Embedding JIT in MRP.
Internationl Journal of Production Research, Vol 29, No 2, Pages 329-341, 1991.

42. N. Singh, H.K. Shek, D. Meloche
The Development of a Kanban System: A Case Study.
International Journal of Production and Operation Management, Vol 10, Issue 7, Pages 28-36, 1990.

43. Y. Mondon
Adaptable Kanban System Helps Toyota Maintain Just-in-Time Production.
Industrial Engineering, Vol 13, Pages 29-46, 1981.

44. T.H. Willis, J.D. Shields
Modifying the ABC Inventory System for a Focussed Factory.
Industrial Engineering, Vol 22, Issue 5, Pages 38-39, May 1990.

45. T.F. Ribar
Housekeeping and Visibility Yield Quick Improvements.
Systems/3X and A S World, Vol 18, Issue 4, Pages 102-106, April 1990.

46. Y. Sugimori, K. Kusumnoki, F. Cho, S. Uchikawa.
Toyota Production System and Kanban System Materialisation of Just-in-time and Respect-for-human System.
International Journal of Production Research, Vol 15, No 6, Pages 553-564, 1977.

47. U. Karmarka
Getting Control of Just-in-Time
Harvard Business Review, Pages 122-131, September-October 1989.

48. R.R. Boccard
Push Vs Pull: Is One Better than the Other.
Production and Inventory Management Review and APICS News, Vol 10, Issue 2, Pages 39-40, February 1990.

49. E.J. Hay
Will the Real Just-in-Time Please Stand Up.
Readings in Zero Inventory, APICS International Conference, Las Vegas, NV, Pages 90-92, 1984.

50. R. Schronberger
World Class Manufacturing.
Free Press, New York, NY, 1986.

51. R. Hall
Attaining Manufacturing Excellence.
Dow Jones-Irwin/APICS, Homewood IL, 1987.

52. A. Harrison, C. Voss
Issues in Setting Up JIT Supply.
International Journal of Operations and Production Management, Vol 10, Issue 2, Pages 84-93, 1990.

53. H. Luss, M.B. Rosenwein
A Lot-Sizing Model for Just-in-Time Manufacturing.
Journal of Operational Research Society, Vol 41, Issue 3, Pages 201-209, March 1990.

54. G.M. Burley, N.D. Slack, R. Wild
Production Flowline System Design - A Review.
AIIE Transactions, Vol 5, Pages 37-48, 1973.

55. P. Drucker
Working Together - Employee Participation in Action.
Interview in 1981, Quoted in Simmons J. and Mores W., New York University Press, 1985.

56. M.L. Sang, M. Ebrahimpour
Just-in-Time Production System: Some Requirements for Implementation.
International Journal of Operations and production Management, Vol, No 4, Pages 3-15, 1984.

57. K. Suzaki
The New Manufacturing Challenge - Techniques for Continuous Improvement.
The Free Press, New York, 1987.

58. R. Cole
Learning from the Japanese: Prospects and Pitfalls.
Management Review, Pages 22-42, September 1980.

59. R.J. Schronberger, E. Knod
Operations Management - Serving the Customer.
Business Publications, 3rd Edition, Plance, TX, 1988.

60. J.A. Klein
The Human Cost of Manufacturing Reform.
Howard Business Review, Pages 60-66, March-April 1989.

61. R.J. Schronberger
Japanese Manufacturing Techniques: Nine Hidden Lessons in Simplicity.
The Free Press, New York, Page 14, 1982.

62. R.J. Schronberger, J.P. Gilbert
Just-in-Time Purchasing: A Challenge for US Industry.
California Management Review, Vol 26, No 1, Pages 64-68, 1983.

63. H.T. Johnson, R.S. Kaplan
Relevance Cost: The Rise and Fall of Management Accounting.
Harvard Business School Press, Boston, MA, 1987.

64. J.G. Bonito
Motivating Employees for Continuous Improvement Efforts Part 1: The Common Obstacles.
Production and Inventory Management Review and APICS News, Vol 10, Issue 6, Pages 24-26, June 1990.

65. E.J. Hay
Implementing JIT Purchasing: Phase V - Continuous Improvement.
Production and Inventory Management Review and APICS News, Vol 10, Issue 5, Pages 24-25, May 1990.

66. M.M. Helms, G.M. Thibadoux, P.J. Haynes, P. Pauley
Meeting Human Resource Challenge of JIT Through Management Development, Vol 9, Issue 3, Pages 28-34, 1990.

67. R.S. Scott, M. Krishnamurly, R. Wilson
Planning for Continual Improvement in a Just-in-Time Environment.
International Journal of Operations and Production Management, Vol 13, No 6, MCB University Press, 1993.

68. N. Oliver
Can JIT Concepts Improve Personal Productivity.
Leadership and Organisational Development Journal, Vol 11, Issue 7, Pages 22-27, 1990.

69. C. Green
Well-designed performance measurement is the strongest tool for controlling your business objectives.
Canadian Manager, Vol 18, Issue 4, Pages 24-27, December 1993.

70. R.I. Anthony, M. Satish
Financial Justification of JIT Implementation.
International Journal of Operations and Production Management, Vol 13, No 4, Pages 32-39, MCB University Press, 1993.

71. T. Billisbach, A. Harrison, S. Croom-Morgan
Just-in-Time: A United States-United Kingdom Comparison.
International Journal of Operations and Production Management, Vol 11, No 10, Pages 44-57, 1991.

72. U. Wemmelov, N.L. Hyer
Cellular Manufacturing in the US industry: a survey of users.
International Journal of Production Research, Vol 27, No 9, 1511-1530, 1989.

73. R.E. White
An Emphirical assessment of JIT in US manufacturers.
Production and Inventory Management Journal, Vol 34, Issue 2, Pages 38-42, Second Quarter 1993.

74. G. Vastag, D.C. Wybark
Global relations between inventory, manufacturing lead time and delivery date promises.
International Journal of Production Economics, Vol 30, Issue 31, Pages 563-569, July 1993.

75. J. Bicheno
Aylesbury Pressings - Parts A, B, C, D.
The Case Clearing House of Great Britain. Case Nos 689-024-1 to 689-027-1, Cranfield 1991.

76. T. Hill
Manufacturing Strategy.
Macmillan, Page 86, 1989.

77. J.L. Burbidge
Production Planning, Pitman Press, Heinmann, London, 1971.

78. R. Wild
Productions & Operations Management
Cassel, Fourth Edition, 1990.

79. B.A. McTernan
Value Engineering & Analysis.
PERA Training, Melton Mowbray, 1991.

80. T. Ohno
Workplace Management.
Productivity Press, English Translation, 1991.

81. G. Hollins, B. Hollins
Total Design, Managing the design process in the service sector.
Pitman Publishing, 1991.

NOMENCLATURE

JIT	Just-in-Time.
ROCE	Return on capital employed.
GT	Group Technology.
WLK	Withdrawal Kanban.
C Kanban	Conveyance Kanban.
APM	Action Plate Method.
MRPI	Material Requirement Planning.
MRPII	Manufacture Resource Planning.
PY-MAC	Pan Yamaha Manufacturing Control.
EDI	Electronic Data Interchange.
OPT	Optimised Production Technology.
FMEA	Failure Mode and Effects Analysis.
VA	Value Analysis.
SPC	Statistical Process Control.
FPN	Factory Production Note.
WIP	Work In Progress.
TQM	Total Quality Management.
RPN	Risk Priority Number.
CNC	Computer Numerical Controlled.
OEM	Original Engineering Manufacturer.

APPENDICES

APPENDIX 1

A list of Tecreel components showing their card quantities and priority rating.

S25 PART NUMBER	DESCRIPTION B.O.C PARTS	A;PRT B;YEAR TODATE C; SALES	YEAR TODATE ANNULISED	ONE MONTHS USAGE	BLUE CARD QUANTITY	PINK CARD QUANTITY	BATCH	B.O.C LEAD TIME	UNIT COST
TC001	INSTRUCTION PUB	A	6702	6702	558	558	1405	1970	42	
136243	DUST CAP	B	854	854	71	142	119	270	28	
176096	POLY BAG	C	9164	9164	763	2289	2563	4860	56	
21175-024	6BA SINGLE COIL SPRING WASHER	C	1344	1344	112	336	94	430	14	
23733-506	EXTERNAL CIRCLIP	C	11118	11118	926	2778	2333	5120	42	
37254-009	CASTING	A	268	268	22	22	55	80	42	
37254-008	CASTING	A	2253	2253	187	187	470	660	42	
37467-037	CASTING	A	9512	9512	792	792	1996	2790	42	
25153-009	METRIC "O" RING	C	854	854	71	213	59	280	14	
36132-249	HYDRAULIC ELBOW	B	886	886	73	146	184	330	42	
G04R04	ADAPTOR	A	32	32	2	2	1	10	14	
G04R06	ADAPTOR	A	2614	2614	217	217	181	400	14	
G06R04	ADAPTOR	A	444	444	37	37	30	70	14	
G06R06	ADAPTOR	A	896	896	74	74	61	140	14	
21127-175	DOWEL PIN'	C	110	110	9	27	22	50	42	
21127-596	SPIROL PIN	C	9784	9784	815	2445	2053	4500	42	
21157-203	EYELET	C	100	100	8	24	10	40	21	
21157-204	WASHER	C	100	100	8	24	10	40	21	
21161-273	NUT WELD	A	106846	106846	8903	8903	3739	12650	7	
21171-048	WASHER	C	18174	18174	1514	4542	635	5180	7	
21171-804	WASHER	C	79394	79394	6616	19848	2778	22630	7	
21171-844	STEEL WASHER	C	1664	1664	138	414	58	480	7	
21171-864	WASHER	C	180	180	15	45	6	60	7	
21174-934	WASHER	C	312	312	26	78	11	90	7	
21175-723	SPRING WASHER	C	318	318	26	78	11	90	7	
21175-724	SPRING WASHER	B	93458	93458	7788	15576	3270	18850	7	
21181-764	WASHER SHAKEPROOF	C	390	390	32	96	13	110	7	
21277-112	TAPTITE PAN HEAD SCREW	C	280	280	23	69	10	80	7	
21277-114	SCREW PAN HEAD	C	14	14	1	3	0	10	7	
21323-038	BRASS BOLT	B	1344	1344	112	224	47	280	7	
21385-048	NYLOC NUT	B	18124	18124	1510	3020	634	3660	7	
21761-701	SET SCREW	C	100	100	8	24	2	30	7	
21813-856	SCREW	C	50	50	4	12	1	20	7	
21815-078	CAPSCREW	C	220	220	18	54	7	70	7	
21815-445	CAP SCREW	C	18654	18654	1554	4662	652	5320	7	
21815-452	CAP SCREW	C	9435	9435	786	2358	330	2690	7	
21815-544	SCREW	B	31016	31016	2584	5168	1085	6260	7	
21831-265	SCREW PAN HEAD	B	2232	2232	186	372	78	450	7	
21831-467	SCREW PAN HEAD	C	78	78	6	18	2	30	7	
21831-472	SCREW PAN HEAD	C	39	39	3	9	1	20	7	
21861-208	BOLT	C	330	330	27	81	11	100	7	
21861-224	BOLT	B	64365	64365	5363	10726	2252	12980	7	
21861-227	SCREW	C	835	835	69	207	29	240	7	
21861-228	BOLT	C	770	770	64	192	26	220	7	
21861-972	SET SCREW	C	273	273	22	66	8	80	7	
21865-228	BOLT	C	816	816	68	204	28	240	7	
21865-234	BOLT	C	2122	2122	176	528	73	610	7	
21881-502	METRIC NUT	C	50	50	4	12	1	20	7	
21885-332	NYLOC NUT	C	312	312	26	78	22	100	14	
21885-532	NYLOC NUT	C	80167	80167	6680	20040	2806	22850	7	
23177-739	BALL	C	2872	2872	239	717	200	920	14	

BREAK DOWN OF TECREEL FOR BLUE/PINK CARDS 12/9/90

S25 PART NUMBER	DESCRIPTION B.O.C PARTS	A B C	PRT YEAR TODATE SALES	YEAR TODATE ANNULISED	ONE MONTHS USAGE	BLUE CARD QUANTITY	PINK CARD QUANTITY	BATCH	B.O.C LEAD TIME	UNIT COST
23733-128	CIRCLIP	C	2899	2899	241	723	607	1340	42	
23733-530	CIRCLIP	C	13767	13767	1147	3441	2890	6340	42	
23733-531	CIRCLIP	C	1096	1096	91	273	229	510	42	
23733-532	CIRCLIP	C	120	120	10	30	25	60	42	
23811-002	STUD	C	9056	9056	754	2262	949	3220	21	
23811-003	STUD	C	9056	9056	754	2262	949	3220	21	
23811-312	COPPER STUD	C	180	180	15	45	18	70	21	
23811-313	STEEL STUD	B	79488	79488	6624	13248	13910	27160	35	
23811-317	STUD	C	312	312	26	78	32	120	21	
25117-791	RING	C	1695	1695	141	423	118	550	14	
25117-793	BACK UP RING	[illegible]	[illegible]	[illegible]	[illegible]	[illegible]	[illegible]	[illegible]	[illegible]	
25117-794	BACK UP RING	B	11596	11596	966	1932	1217	3150	21	
25117-825	BACK UP WASHER	C	44800	44800	3733	11199	4703	15910	21	
25117-830	BACK UP WASHER	C	1336	1336	111	333	139	480	21	
25117-842	BACK UP WASHER	C	5990	5990	499	1497	628	2130	21	
25121-202	QUAD RING	B	45880	45880	3823	7646	9634	17280	42	
25131-003	BONDED SEAL	B	10836	10836	903	1806	1517	3330	28	
25131-006	BONDED SEAL	B	47212	47212	3934	7868	6608	14480	28	
25131-009	BONDED SEAL	B	552	552	46	92	58	150	21	
25131-652	SEAL	C	99	99	8	24	10	40	21	
25131-891	SEAL	C	7715	7715	642	1926	1078	3010	28	
25141-227	"O" RING	C	4165	4165	347	1041	582	1630	28	
25143-023	"O" RING	C	414	414	34	102	56	160	28	
25143-028	"O" RING	C	250	250	20	60	34	100	28	
25143-070	"O" RING	C	33625	33625	2802	8406	4706	13120	28	
25143-072	"O" RING	C	1102	1102	91	273	152	430	28	
25145-105	"O" RING	C	11223	11223	935	2805	1571	4380	28	
25145-107	"O" RING	C	50468	50468	4205	12615	7064	19680	28	
25147-428	"O" RING	C	1176	1176	98	294	164	460	28	
25147-715	"O" RING	C	45000	45000	3750	11250	6300	17550	28	
25148-317	"O" RING	C	8697	8697	724	2172	1216	3390	28	
25153-015	"O" RING	C	276	276	23	69	38	110	28	
25227-581	PLUG BLANKING	B	1620	1620	135	270	56	330	7	
25227-582	HEX PLUG	B	19069	19069	1589	3178	667	3850	7	
27221-206	RING TERMINAL	B	672	672	56	112	140	260	42	
27221-379	RING TERMIAL	B	2004	2004	167	334	420	760	42	
27315-368	CABLE CLAMP	C	220	220	18	54	44	100	42	
27421-180	QUICK RELEASE TERMINAL	C	112	112	9	27	22	50	42	
27421-181	PIN TERMINAL	C	672	672	56	168	140	310	42	
27423-176	QUICK RELEASE TERMINAL	C	109	109	9	27	22	50	42	
27423-177	WIRE TERMINAL	C	648	648	54	162	136	300	42	
27832-306	BRUSH ASSY	A	1548	1548	129	129	433	570	56	
27832-307	BRUSH MOUNT	A	1344	1344	112	112	376	490	56	
31414-219	SPRING	A	2872	2872	239	239	601	850	42	
31839-309	LABLE	B	12039	12039	1003	2006	1685	3700	28	
31838-348	LABLE VINYL SWIVEL	B	8845	8845	737	1474	1237	2720	28	
31838-385	CAUTION LABEL	B	2690	2690	224	448	376	830	28	
31838-387	LABEL	C	793	793	66	198	110	310	28	
31838-388	LABEL	C	1802	1802	150	450	252	710	28	
31864-252	LABEL	A	8073	8073	672	672	1128	1800	28	
31864-253	LABEL	B	4212	4212	351	702	589	1300	28	

BREAK DOWN OF TECREEL FOR BLUE/PINK CARDS 12/9/90

S25 PART NUMBER	DESCRIPTION B.O.C PARTS	A B C	PRT YEAR TODATE SALES	YEAR TODATE ANNULISED	ONE MONTHS USAGE	BLUE CARD QUANTITY	PINK CARD QUANTITY	BATCH	B.O.C LEAD TIME	UNIT COST
31864-275	ALUMINIUM LABEL	A	1182	1182	98	98	164	270	28	
38118-214	PLASTIC COVER	A	7255	7255	604	604	1522	2130	42	
38118-217	PLASTIC COVER	A	2659	2659	221	221	557	780	42	
38281-631	RETAINING RING	A	15112	15112	1259	1259	3172	4440	42	
38283-604	BACK UP RING	A	62714	62714	5226	5226	13169	18400	42	
38448-419	RUBBER SEAL	C	200	200	16	48	40	90	42	
38477-608	PLASTIC ARBOR	A	9823	9823	818	818	2060	2880	42	
38514-203	CAPPED BUSH	C	108	108	9	27	22	50	42	
38752-412	BRUSH HOLDER	A	112	112	9	9	44	60	84	
32434-625	SPRING RET PLATE	A	2340	2340	195	195	491	690	42	
160841	SPRING	A	2438	2438	203	203	511	203	42	
31485-208	SPRING	A	9776	9776	814	814	2051	814	42	
31845-214	SPRING	A	565	565	47	47	118	47 + Blue	42	
31485-216	SPRING	A	2690	2690	224	224	564	224 + card	42	
34446-204	ADAPTOR	C	40	40	3	9	7	20 + Quarby	42	
34857-204	ADAPTOR	A	150	150	12	12	30	50	42	
34866-629	ADAPTOR	A	28	28	2	2	5	10	42	
134608	SPRING HOUSING	A	98	98	8	8	19	30	42	
32472-810	FLANGE	A	6240	6240	520	520	1310	1840	42	
32472-811	FLANGE	A	3452	3452	287	287	722	1010	42	
32472-817	FLANGE	A	2869	2869	239	239	601	850	42	
33226-614	SPRING HOUSING	A	11328	11328	944	944	2378	3330	42	
33226-615	RETAINING PLATE	A	11416	11416	951	951	2396	3350	42	
33415-204	DRUM	A	5982	5982	498	498	1254	1760	42	
33415-206	DRUM	A	3152	3152	262	262	660	930	42	
33415-207	DRUM	A	2701	2701	225	225	566	800	42	
33435-204	SPRING HOUSING	A	2340	2340	195	195	491	690	42	
36613-616-100	DRUM STRAP	A	964	964	80	80	202	290	42	
36613-624	DRUM STRAP	A	204	204	17	17	42	60	42	
36844-609	SPRING CASSETTE	A	20173	20173	1681	1681	4236	5920	42	
7513-225	CARTON	A	19098	19098	1591	1591	2004	3600	21	
7513-231	CARTON	A	16466	16466	1372	1372	1728	3100	21	
7513-236	CARTON	A	6062	6062	505	505	636	1150	21	
2434-618 OS100		A	133	133	11	11	36	50	56	
2434-619 OS100	CENTRE FLANGE 4 PORT	A	225	225	18	18	44	70	42	
2434-620 OS100		A	83	83	6	6	14	30	42	
2434-627	FLANGE	A	185	185	15	15	37	60	42	
3152-615	PROTECTIVE HOUSING	A	124	124	10	10	25	40	42	
2861-620	OUTER FLANGE	A	110	110	9	9	22	40	42	
2472-852	FIXED FLANGED	A	110	110	9	9	22	40	42	
2861-621	OUTER FLANGE	A	100	100	8	8	19	30	42	
2472-853	FIXED FLANGED	A	100	100	8	8	19	30	42	
3226-642	SPRING CONTAINER	A	210	210	17	17	42	60	42	
3226-643	RETAINING PLATE	A	210	210	17	17	42	60	42	
3225-623 OS100	SEAL HOUSING	A	59	59	4	4	10	20	42	

S25 PART NUMBER	DESCRIPTION MANUFACTURED PARTS	A B C	PRT YEAR TODATE SALES	YEAR TODATE ANNULISED	ONE MOUNTHS USAGE	BLUE CARD QUANTITY	PINK CARD QUANTITY	BATCH SIZE	COST OF BATCH	DAYS LEAD TIME
38452-244	WIRE GUIDE BRUSH	C	110	110	9	27	5	50		10
38448-420	RUBBER SEAL	C	200	200	16	48	5	100		5
33156-209	LOVATION PIN	C	98	98	8	24	10	50		20
33156-210	SPRING LOCATION PIN	B	2340	2340	195	390	234	650		20
33164-602	SWIVEL SHAFT 4 PORT	A	312	312	26	26	62	100		40
33212-211	GUIDE WASHER	C	2056	2056	171	513	205	750		20
105340	UNION 1/4" X 1/4" BSP	C	1093	1093	91	273	109	400		20
105341	UNION 3/8" X 3/8" BSP	A	18985	18985	1582	1582	1898	3500		20
105345	UNION 1/4" X 1/4" BSP	C	140	140	11	33	13	50		20
105346	UNION 3/8" X 3/8" BSP	B	588	588	49	98	59	200		20
105348	UNION 1/4" X 3/8" BSP	B	372	372	31	62	37	100		20
106819	ADAPTOR 1/4" BSP 9/16"JIC	C	326	326	27	81	32	150		20
107236	BANJO BOLT 1/4" BSP	C	2685	2685	223	669	268	950		20
107804	SWIVEL SHAFT	A	1431	1431	119	119	214	350		30
107824	SWIVEL SHAFT	A	7164	7164	597	597	1075	1700		30
162313	BRACKET MK 1	A	2266	2266	188	188	226	450		20
32116-620	SLIP RING CLAMP	A	110	110	9	9	5	50		10
32141-220	CENTER PIN	C	156	156	13	39	8	50		10
32377-220	SPACER	C	78	78	6	18	7	50		20
32412-226	SPACER	B	581	581	48	96	58	200		20
32671-612	SPACER	C	2056	2056	171	513	205	750		20
32842-219	SPACER	C	770	770	64	192	77	300		20
33113-603	RING SUPPORT	A	110	110	9	9	5	50		10
33114-228	VALVE STOP	B	2872	2872	239	478	287	800		20
33123-248	PIN LOCATION	B	11094	11094	924	1848	1109	3000		20
33242-227	SPACER POST	C	220	220	18	54	22	100		20
33371-614	BANJO BODY	A	17423	17423	1451	1451	2612	4100		30
33612-226	SWIVEL PISTON	B	1435	1435	119	238	214	500		30
33616-607	HOSE REEL SHAFT MK3	A	5641	5641	470	470	846	1350		30
33616-619	SHAFT HOSE REEL SPOT FACE	A	892	892	74	74	133	250		30
33616-622	SHAFT HOSE REEL MK 3	A	2416	2416	201	201	362	600		30
33616-623	SHAFT HOSE REEL MK3	A	24	24	2	2	4	50		30
33616-624	SHAFT HOSE REEL	A	15	15	1	1	2	50		30
33616-625	SHAFT MULTI FUNCTION REEL	A	110	110	9	9	16	50		30
33616-627	SHAFT HOSE REEL ISS1	A	14	14	1	1	2	15		30
33616-628	SHAFT ATLAS	A	390	390	32	32	58	100		30
33616-629	375 TEC REEL SHAFT ATLES	A	50	50	4	4	7	50		30
33617-601	SHAFT HOSE REEL 4 PORT	A	262	262	21	21	50	100		40
33617-603	SHAFT HOSE REEL 3 PORT	A	20	20	1	1	2	25		40
33646-609	SHAFT 1/2" SWIVEL	A	78	78	6	6	7	50		20
33714-602	SHAFT ASSY	A	2260	2260	188	188	451	650		40
33841-423	SPACER	C	2056	2056	171	513	205	750		20
34243-212	PLUG BLANKING 3/8" BSP	C	10655	10655	887	2661	1064	3750		20
34243-213	PLUG BLANKING 3/8" BSP	C	11	11	1	3	1	50		20
34273-753	BOLT VALVE ASSY	C	2872	2872	239	717	287	1050		20
34273-754	BANJO BOLT	B	14607	14607	1217	2434	1460	3900		20
34274-660	BANJO BOLT	A	408	408	34	34	41	100		20
34457-220	ADAPTOR	B	4927	4927	410	820	615	1450		25
34457-222	ADAPTOR	A	69	69	5	5	2	50		5
34811-627	ADAPTOR	C	8618	8618	718	2154	862	3050		20
34816-209	ADAPTOR	A	156	156	13	13	16	50		20
34832-206	ADAPTOR	A	252	252	21	21	25	50		20
34857-203	ADAPTOR	B	1014	1014	84	168	101	300		20

325 PART NUMBER	DESCRIPTION MANUFACTURED PARTS	A B C	PRT YEAR TODATE SALES	YEAR TODATE ANNULISED	ONE MOUNTHS USAGE	BLUE CARD QUANTITY	PINK CARD QUANTITY	BATCH SIZE	COST OF BATCH	DAYS LEAD TIME
34857-205	ADAPTOR	B	1122	1122	93	186	112	300		20
34865-223	ADAPTOR	C	6781	6781	565	1695	678	2400		20
34865-225	ADAPTOR	A	20	20	1	1	1	50		20
34866-625	ADAPTOR	C	14751	14751	1229	3687	1475	5200		20
34866-626	ADAPTOR	B	700	700	58	116	70	200		20
34873-211	ADAPTOR	A	311	311	25	25	30	100		20
34873-609	ADAPTOR	B	975	975	81	162	97	300		20
34876-605	ADAPTOR	A	32	32	2	2	2	50		20
35152-430	BRACKET	A	78	78	6	6	5	50		15
35162-809	BRACKET	A	5272	5272	439	439	395	850		15
35517-222	MOUNTING BRACKET	A	2414	2414	201	201	181	400		15
35517-228	MOUNTING BRACKET	A	15	15	1	1	1	10		10
35517-229	MOUNTING BRACKET	A	24	24	2	2	1	50		10
36234-267	BRACKET	A	78	78	6	6	5	50		15
36432-224	D.HOLE BRACKET	B	8601	8601	716	1432	430	1900		10
36432-227	MOUNTING BRACKET	C	156	156	13	39	8	50		10
37178-201	SWIVEL BODY	A	8591	8591	715	715	858	1600		20
37178-204	SWIVEL BODY	A	312	312	26	26	31	100		20
37178-205	SWIVEL BODY	A	78	78	6	6	7	50		20
37254-211	HUB 4 PORT	A	268	268	22	22	26	50		20
37254-214	HUB 3 PORT	A	11	11	1	1	1	10		10
37274-208	HUB	A	2253	2253	187	187	224	450		20
37467-249	HUB MK 3	A	5304	5304	442	442	530	1000		20
37467-265	HUB MK 111HUB MK 3	A	39	39	3	3	2	10		10
37467-269	375 HUB LH	A	1298	1298	108	108	130	250		20
37467-270	TECREEL HUB RH	A	2871	2871	239	239	287	550		20
46613-619	DRUM STRAP	A	22	22	1	1	1	25		20

COST OF MAXIMUM STOCK HOLDING OF MANUFACTURED PARTS £100,076.34

"A" = 1 MONTHS STOCK HOLDING IN BLUE BIN PINK BIN = LEAD TIME QUANTITY PLUS A SAFTY OF 20%

"B" = 2 MONTHS STOCK HOLDING IN BLUE BIN

"C" = 3 MONTHS STOCK HOLDINGIN BLUE BIN

BREAK DOWN OF TECREEL FOR BLUE/PINK CARDS 9/7/90

S25 PART NUMBER	DESCRIPTION HOSE ASSEMBLY PARTS	A B C	PRT YEAR TODATE SALES	YEAR TODATE ANNULISED	ONE MOUNTHS USAGE	BLUE CARD QUANTITY	PINK CARD QUANTITY	BATCH SIZE	COST OF BATCH	LEAD TIME
PNS40075-7300	HOSE 3/8" BORE	A	1	1	1	1	1	2		20
PNS40094	HOSE 1/4"BORE 1/4" BSP	A	24	24	2	2	4	10		30
PNS40098	HOSE 1/4" BOR M16 X1.5	A	52	52	4	4	7	15		30
PNS40099	HOSE 1/4" BORE 1/4" BSP	A	197	197	16	16	19	40		20
PNS40110-3810	HP HOSE ASSY	A	24	24	2	2	4	10		30
PNS40111-5180	HOSE 3/8" BORE 9/16" JIC	A	14	14	1	1	2	5		30
PNS40167-4420	HP HOSE ASSY 1/4"	A	2	2	1	1	2	5		30
PNS40169-5180	HP HOSE ASSY	A	12	12	1	1	2	5		30
PNS40278-3500	HP HOSE ASSY	A	1	1	1	1	2	2		30
PNS40279-3500	HP HOSE ASSY	A	10	10	1	1	2	5		30
PNS40279-4100	HP HOSE ASSY	A	6	6	1	1	2	5		30
PNS40279-5600	HP HOSE ASSY	A	6	6	1	1	2	5		30
PNS40280-3500	HP HOSE ASSY	A	4	4	1	1	2	5		30
PNS40281-2700	HP HOSE ASSY	A	2	2	1	1	2	5		30
PNS40281-4900	HP HOSE ASSY	A	29	29	2	2	4	10		30
PNS40281-7300	HP HOSE ASSY	A	7	7	1	1	2	5		30
PNS40282-4900	HP HOSE ASSY	A	1	1	1	1	2	2		30
PNS40282-7300	HP HOSE ASSY	A	40	40	3	3	5	10		30
PNS40283-6500	HP HOSE ASSY	A	3	3	1	1	2	5		30
PNS40342-3900	HP HOSE ASSY	A	204	204	17	17	31	50		30
PNS40363-4900	HP HOSE ASSY	A	100	100	8	8	10	20		20
PNS40363-7300	HP HOSE ASSY	A	327	327	27	27	32	60		20
PNS40377	HP HOSE ASSY	A	18	18	1	1	2	5		30
PNS40384-5180	HP HOSE ASSY	A	126	126	10	10	18	30		30
PNS40384-7620	HP HOSE ASSY	A	96	96	8	8	14	25		30
PNS40408-2700	HP HOSE ASSY	A	7	7	1	1	1	5		20
PNS40408-4900	HP HOSE ASSY	A	225	225	18	18	22	40		20
PNS40408-7300	HP HOSE ASSY	A	182	182	15	15	18	35		20
PNS5889-4420	HOSE 1/4"BORE 1/4" BSP	A	18	18	1	1	2	5		30
PNS5889-6710	HOSE 1/4" BORE 1/4" BSP	A	40	40	3	3	5	10		30
PNS5994-3810	5/16" BORE 9/16" JIC	A	16	16	1	1	2	5		30
PNS5994-5940	5/16" BORE 9/16" JIC	A	10	10	1	1	2	5		30
PNS5994-9450	5/16" BORE 9/16" JIC	A	2	2	1	1	2	5		30
PNS5995-3050	3/8" BORE 3/8" BSP	A	10	10	1	1	2	5		30
PNS5995-5180	3/8" BORE 3/8" BSP	A	40	40	3	3	5	10		30
PNS5995 7620	3/8" BORE 3/8" BSP	A	24	24	2	2	4	10		30
04104206-4100	HOSE 1/4" BORE 1/4" BSP	A	316	316	26	26	31	60		20
04104206-6500	HOSE 1/4" BORE 1/4" BSP	A	1072	1072	89	89	107	200		20
04104206-8000	HOSE 1/4" BORE 1/4" BSP	A	94	94	7	7	8	20		20
04104706-4100	HP HOSE ASSY	A	20	20	1	1	1	5		20
04104706-6000	HP HOSE ASSY	A	13	13	1	1	1	5		20
04206414-4100	HOSE 1/4" BORE M16X 1.5	A	2	2	1	1	2	5		30
05104706-3500	HP HOSE ASSY	A	5	5	1	1	1	5		20
05104706-5600	HP HOSE ASSY	A	42	42	3	3	4	10		20
0510606-3500	HOSE 5/16" BORE 3/8" BSP	A	67	67	5	5	6	15		20
05106206-5600	HOSE 5/16" BORE 3/8" BSP	A	24	24	2	2	2	5		20
05106206-9300	HOSE 5/16" BORE 3/8" BSP	A	2	2	1	1	1	5		20
05106706-3500	HP HOSE ASSY	A	12	12	1	1	1	5		20
05106706-5600	HP HOSE ASSY	A	2	2	1	1	1	5		20
05206509-3500	HOSE 5/16" BORE 9/16" JIC	A	152	152	12	12	14	30		20
05206509-5600	HOSE 5/16" BORE 9/16" JIC	A	101	101	8	8	10	20		20

BREAK DOWN OF TECREEL FOR BLUE/PINK CARDS 9/7/90

325 PART NUMBER	DESCRIPTION HOSE ASSEMBLY PARTS	A B C	PRT YEAR TODATE SALES	YEAR TODATE ANNULISED	ONE MOUNTHS USAGE	BLUE CARD QUANTITY	PINK CARD QUANTITY	BATCH SIZE	COST OF BATCH	LEAD TIME
V05206509-9300	HOSE 5/16" BORE 9/16 JIC	A	10	10	1	1	1	5		20
V05414706-3500	HP HOSE ASSY	A	24	24	2	2	2	5		20
V05509706-3500	HP HOSE ASSY	A	100	100	8	8	10	20		20
V05509706-5600	HP HOSE ASSY	A	221	221	18	18	22	40		20
V06106206-2700	HOSE 3/8" BORE 3/8" BSP	A	341	341	28	28	34	65		20
V06106206-4900	HOSE 3/8" BORE 3/8" BSP	A	612	612	51	51	61	115		20
V06106206-7300	HOSE 3/8" BORE 3/8" BSP	A	31	31	2	2	2	5		20
V06206414-2700	HOSE 3/8" BORE M16 X 1.5	A	2	2	1	1	1	5		20
V06206414-4900	HOSE 3/8" BORE M16 X 1.5	A	201	201	16	16	19	40		20
V06206414-7300	HOSE 3/8" BORE M16 X 1.5	A	1	1	1	1	1	2		20
V06206509-4900	TWIN HOSE ASSY	A	2	2	1	1	1	5		20
V08106206-6500	TWIN HOSE ASSY	A	12	12	1	1	1	5		20
V08108206-3900	HOSE 1/2" BORE 1/2" BSP	A	74	74	6	6	7	15		20
V08108206-6200	HOSE 1/2" BORE 1/2" BSP	A	18	18	1	1	1	5		20
Y05509706-6000	HP HOSE ASSY 5/16" HS 40	A	16	16	1	1	1	5		20

COST OF MAXIMUM STOCK HOLDINGS OF HOSE ASSY £24,089.09

"A" = 1 MONTHS HOLDING IN THE BLUE BIN

"B" = 2 MONTHS HOLDING IN THE BLUE BIN

APPENDIX 2

Showing the time study for the new flowline layout at Tecalemit Systems Limited

All time in Minutes

STATION 1		STATION 2		STATION 3		STATION 4	
Build Hub	1.5	Build Shaft	1.5	Build Spring	3.5	Collect & Attach Hose to Assembly	6.0
Assemble Hub & Shaft	1.0	Assemble Drum & Flange Datecode, label & fix	3.0	Attach Spring Assembly & Hub & Shaft to Tinware Assembly	2.0	Prepare box, clean Tecreel & pack in box	2.5
Pressure Test Hub & Shaft	5.0	Assemble tinware to Hub & Shaft Assembly	1.5	Fix Bracket & Adaptors	1.5		
TOTAL	7.5 MINS	TOTAL	6.0 MINS	TOTAL	7.0 MINS	TOTAL	8.5 MINS

POTENTIAL FAILURE MODE AND EFFECTS ANALYSIS (PROCESS)

TECAMEC PART NO.	33616-607	ISSUE 15	OUTSIDE SUPPLIERS AFFECTED	ENGINEER TEAM	Pat Read David Roe Robin Richmond Tim Kitt
CUSTOMER PART NO.		ISSUE	MODEL YEAR/VEHICLE		
PART DESCRIPTION	Tecreel Shaft		SCHEDULED PRODUCTION RELEASE		
FMEA DATE (ORIG)	23.1.91 (REV)	23.1.91	SCHEDULE SAMPLE DATE	March 1991	FMEA NO. 169

PROCESS FUNCTION	POTENTIAL FAILURE MODE	POTENTIAL EFFECTS OF FAILURE	POTENTIAL CAUSE OF FAILURE	EXISTING CONDITIONS CURRENT CONTROLS	O	S	D	R No	RECOMMENDED ACTIONS	RESPONSIBLE ENG.	RESULTING CONDITIONS ACTIONS TAKEN	O	S	D	R No
Machining 41,36/41,33 dia	Journal dia undersize	Tecreel leakage	Incorrectly ground	Comparator slip gauges	2	8	3	48	Introduce SPC on grinding m/c with comparator	P Toms	SPC introduced on grinding	1	8	2	16
									Tighten drg limits	T Kitt	Drg modified				
	Journal dia oversize	Poor Tecreel retraction	Incorrectly ground	Comparator slip gauges	2	8	2	32	Introduce SPC on grinding m/c with comparator	T Kitt	Drg modified	1	8	2	16
									Tighten drg limits						
	Journal dia Tapered excessively	Tecreel leakage Poor retraction	Incorrectly ground	Comparator slip gauges	4	8	2	64	Introduce SPC on grinding m/c with comparator	T Kitt	Drg modified	1	8	2	16
									Tighten drg limits						
									Overhaul grind m/c	T Kitt	M/c serviced				
									Overhaul grind m/c	T Kitt	M/c serviced				
	Journal dia out of round	Tecreel leakage Poor retraction	Incorrectly ground	None	2	8	10	160	Introduce ovality checks after grinding. Specify max ovality	T Kitt					
	Incorrect MOP polish	Tecreel leakage poor retraction	Polishing incorrect or incomplete	None	2	8	9	144	Control on polish m/c. Surface finish checks	R Richmond P Toms					
	Journal dia undersize from CNC	Unable to achieve min drawing limit	Incorrectly turned on CNC	Gap gauge	2	8	2	32	Nil						
	Journal dia rough turned on CNC	Unable to achieve min drawing limit	Incorrectly turned on CNC	None	2	8	6	96	Specify turned finish	T Kitt					
									Ensure frequency of check	P Toms					

O = Occurrence S = Severity D = Detection R No. = Risk Priority Number.

APPENDIX 3

Showing results of process FMEA on the tecreel hub and shaft.

POTENTIAL FAILURE MODE AND EFFECTS ANALYSIS (PROCESS)

TECAHEC PART NO. 37467-249 ISSUE 7 OUTSIDE SUPPLIERS AFFECTED Duport Harpers ENGINEER TEAM Pat Read, David Roe, Robin Richmond, Tim Kitt

CUSTOMER PART NO. ISSUE MODEL YEAR/VEHICLE

PART DESCRIPTION Tecreel Hub SCHEDULED PRODUCTION RELEASE

FMEA DATE (ORIG) 23.1.91 (REV) SCHEDULE SAMPLE DATE March 1991 FMEA NO. 168

PROCESS FUNCTION	POTENTIAL FAILURE MODE	POTENTIAL EFFECTS OF FAILURE	POTENTIAL CAUSE OF FAILURE	EXISTING CONDITIONS CURRENT CONTROLS	O	S	D	R No	RECOMMENDED ACTIONS	RESPONSIBLE ENG.	RESULTING CONDITIONS ACTIONS TAKEN	O	S	D	R No
Machining 41,38/ 41,43 Dia bore (CNC)	Bore Undersize	Poor Retraction	Incorrectly M/cd	Inspection internal micro	5	8	3	120	Tighten tolerance on bore SPC and capability trials on CNC	T Kitt	Org modified SPC initiated	4	8	2	64
	Bore Oversize	Tecreel leakage	Incorrectly M/cd	Inspection internal micro	5	8	3	120	Tighten tolerance on bore SPC and capabilty trials on CNC	T Kitt P Toms	Org modified SPC initiated				
	Bore Tapered	Tecreel leakage Poor retraction	Incorrectly M/cd	Inspection internal micro	5	8	3	120	Tighten tolerance on bore SPC and capability trials on CNC	T Kitt P Toms	Org modified SPC initiated				
	Bore Oval	Tecreel leakage	Incorrectly M/cd	None	2	8	10	160	Introduce quality checks. Equipment required	P Toms					
	Casting Porous	Tecreel leakage	Poor quality casting	Visual on machining and assembly	2	8	2	32	Nil						
	Incorrect surface finish	Tecreel leakage	Material too hard - casting	None	4	8	10	320	Instigate goods inwards. Hardness checks Request certificate of comformity.	D Roe	Improved surface finish specified				
		Poor retraction (Poor surface finish)	Material too soft - casting	None	4	8	10	320	Measure surface finish grooves and bore. Instigate new materials	P Toms T Kitt					

O = Occurrence S = Severity D = Detection R No. = Risk Priority Number.

POTENTIAL FAILURE MODE AND EFFECTS ANALYSIS (PROCESS)

TECAMEC PART NO. 37467-249 ISSUE 7 OUTSIDE SUPPLIERS AFFECTED Duport Harpers ENGINEER TEAM Pat Read, David Rae, Robin Richmond, Tim Kitt

CUSTOMER PART NO. ISSUE / MODEL YEAR/VEHICLE

PART DESCRIPTION Tecreal Hub SCHEDULED PRODUCTION RELEASE

FMEA DATE (ORIG) 23.1.91 (REV) SCHEDULE SAMPLE DATE March 1991 FMEA NO. 168

PROCESS FUNCTION	POTENTIAL FAILURE MODE	POTENTIAL EFFECTS OF FAILURE	POTENTIAL CAUSE OF FAILURE	EXISTING CONDITIONS CURRENT CONTROLS	O	S	D	R No	RECOMMENDED ACTIONS	RESPONSIBLE ENG.	RESULTING CONDITIONS ACTIONS TAKEN	O	S	D	R No
Roller burnish 41,38/41,43 dia	Bore Undersize	Poor Tecreal retraction	Tool incorrectly set	100% air gauge	1	8	3	24	)Tighten tolerance)on bore	T Kitt	Drg modified				
	Bore Oversize	Tecreal leakage	Tool incorrectly set	100% air gauge	2	8	3	48	)Improve reliability) of roller burnish	R Richmond	Reliability improved To be verified				
	Incorrect surface finish	Poor Tecreal retraction	Incorrect tool setting	None	5	8	3	320	Introduce surface finish checks on bore	P Toms					
Machining Seal Grooves 47,55/47,62 dia	Groove dia undersize	Tecreal leakage	Incorrect setting	Inspection with 3 point recess dial indicator	2	8	7	112	Purchase improved facility to measure groove	P Toms T Kitt	Purchased and in use	1	8	3	24
	Groove dia oversize	Tecreal leakage	Incorrect setting	Inspection with 3 point recess dial indicator	2	8	7	112	Purchase improved facility to measure groove	P Toms T Kitt	Purchased and in use				
	Grooves eccentric to main bore	Tecreal leakage	Casting movement during machining	None	1	8	10	80	Initial concentricity check during m/c set-up	P Toms					
	Surface finish too rough	Tecreal leakage	M/c setting incorrect. Incorrect turning tips. Casting too hard.	None	8	8	10	640	Investigate improved machining. Investigate alternative material Obtain means to check surface finish	P Wotton T Kitt P Toms	Machining improved 420/12 56 Iron on trial Purchased	3	8	4	96

O = Occurrence S = Severity D = Detection R No. = Risk Priority Number.

APPENDIX 4

Showing a sample statistical process control used in conjunction with the Tecreel hub machining operation.

TECAMEC LTD

Process Control Chart ($\bar{X}$/R)

Part Name	Characteristic	Specification	Sampling — Frequency	Op.	Machine Number
HUB	BORE	41.335/41.365	5 PER HOUR		

Distribution of X .370 FLYER ?

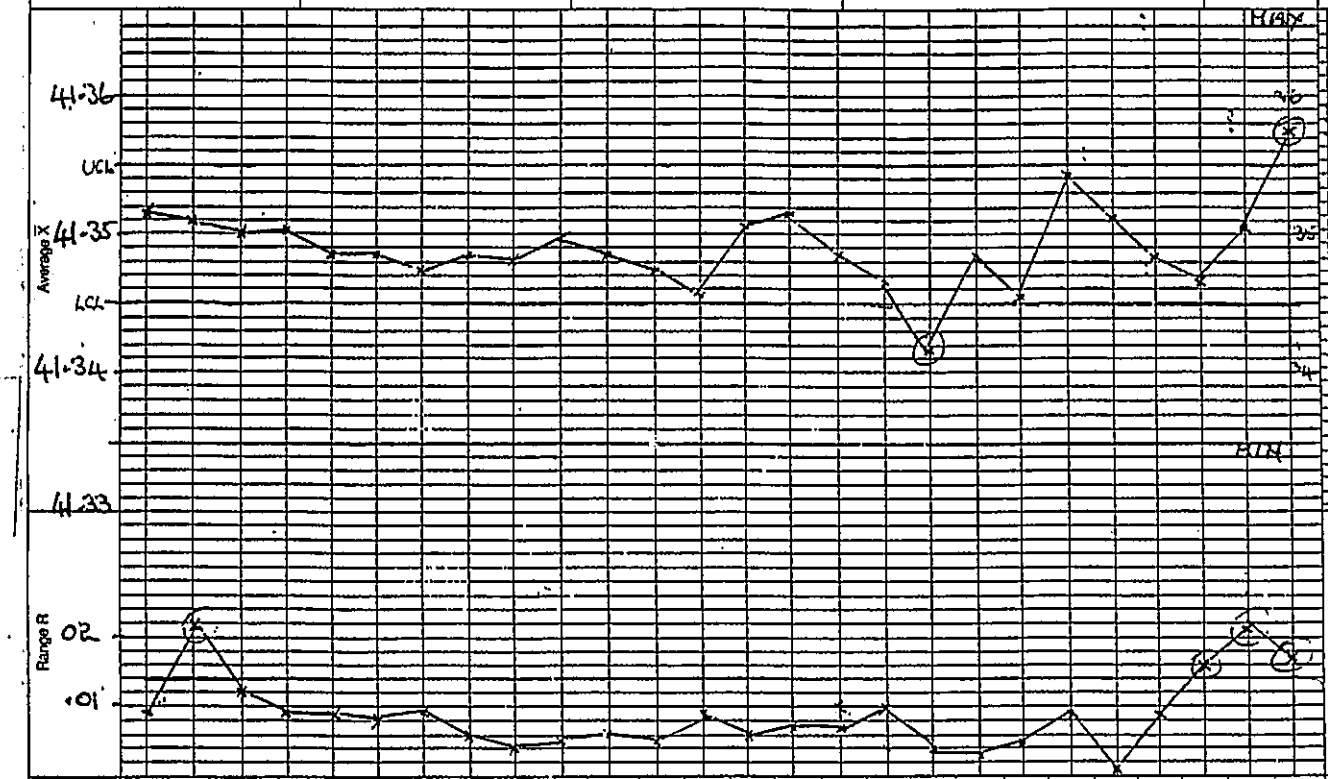

Remarks

Shift	D/S						D/S						D/S						D/S						D/S	
Time	09 00	10-00	11-00	12-00	14-00	15-00	09 00	10-00	11-00	12-00	13-00	15-00	09 00	10-00	11-00	12-00	14-00	15-00	09 00	10-00	11-00	12-00	14-00	15-00	09 00	11-00
Date	29/8						29/8						30/8						2/9						3/9	
X 1	.350	.350	.349	.350	.350	.349	.352	.346	.353	.350	.348	.346	.350	.348	.347	.351	.347	.345	.347	.349	.354	.352	.349	.351	.348	.353
X 2	.347	.353	.344	.354	.349	.350	.347	.350	.350	.348	.347	.348	.345	.351	.353	.350	.344	.340	.350	.343	.350	.352	.353	.349	.337	.355
X 3	.352	.343	.350	.352	.351	.348	.349	.352	.349	.350	.346	.349	.346	.352	.352	.347	.350	.342	.348	.346	.352	.351	.345	.352	.358	.370
X 4	.356	.341	.351	.345	.352	.346	.345	.346	.349	.347	.350	.349	.341	.353	.356	.351	.347	.341	.349	.346	.356	.351	.344	.351	.356	.351
X 5	.354	.351	.356	.350	.351	.351	.343	.346	.350	.353	.352	.347	.345	.349	.351	.350	.351	.341	.349	.348	.359	.351	.351	.337	.354	.356
X 6																										
X 7																										
X 8																										
EX	1.359	1.355	1.350	1.351	1.349	1.343	1.336	1.340	1.351	1.350	1.343	1.337	1.327	1.351	1.351	1.349	1.333	1.308	1.344	1.342	1.371	1.355	1.342	1.340	1.353	1.384
X̄	1.3518	1.351	1.350	1.3502	1.3486	1.3460	1.3418	1.3468	1.3502	1.3486	1.3466	1.3474	1.3454	1.3502	1.3502	1.3498	1.3466	1.3418	1.3498	1.3468	1.3542	1.3510	1.3484	1.3474	1.3506	1.3768

$\bar{X}$ = ____ $\bar{R}$ = ____

$UCL_{\bar{X}} = \bar{X} + A_2\bar{R}$ = ____ $LCL_R = D_3\bar{R}$ = ____

$LCL_{\bar{X}} = \bar{X} - A_2\bar{R}$ = ____ $UCL_R = D_4\bar{R}$ = ____

Constants

Sample Size n	A_2	D_3	D_4
2	1.880	0	3.268
3	1.023	0	2.574
4	0.729	0	2.282
5	0.577	0	2.114
6	0.483	0	2.004
8	0.373	0.136	1.864

APPENDIX 5

Showing the torque values for all fittings used in the assembly process.

RR/FORM

TECAMEC LTD

TORQUE VALUES FOR TECREEL ASSYS

TYPE 375	4 PORT	TYPE 4	TECREEL SHAFT
Hub Adaptors torque to 40 lbf ft Shaft inlet adaptors torque to 40 lbf ft Hose end fittings torque to 25 lbf ft	Banjo bolts on hub torque to 20 lbf ft	Swan neck fittings torque to 20 lbf ft	G 1/4" blank plugs torque to 40lbf ft 6 1/8" blank plugs torque to 20 lbf ft

ALL M6 NUTS TO BE TORQUED TO 4 LBF FT

ALL 2BA NUTS TO BE TORQUED TO 2 LBF FT

WARNING

CALIBRATION OF ALL AIR GUNS AND TORQUE WRENCHES TO BE CARRIED OUT ON THE ABOVE RELEASE TORQUE VALUES AT MONTHLY INTERVALS UNTIL FURTHER NOTICE, TOLERANCE ON ALL TORQUE SETTINGS ± 10%.

2.7.90 6.8.90 3.9.90 1.10.90 5.11.90 3.12.90

Describing the calibration procedure for the air and hand wrenches in the Tecreel section.

SPECIFICATION TD 604	TECALEMIT (ENGINEERING) LTD.
TITLE:- TORQUE CALIBRATION FOR TECREEL ASSY	

1. Collect digital torque meter from inspection.

2. Connect amplifier model no. 50028 into rear of meter. (with writing on amplifier to face same way as writing on back of meter)

3. Check signal multiplier is in forward normal setting.

4. Switch battery pack to battery mode position.

5. Connect din socket on meter to din socket on transducer model no. 50028 DES.

6. Switch transducer capacity on front of meter to 100 and check multiplication switch is on X 1.

7. Push circuit test button and read output, reading must be less than 100; if reading exceeds 100 then call quality engineer.

8. Set main control panel switch to memory auto cancel.

		ISSUE						TITLE:-
COMPILED		CHANGE Nº						TORQUE CALIBRATION FOR TECREEL ASSY
CHECKED		ISSUE						
		CHANGE Nº						
APPR D		SHEET Nº 1 OF 4 SHEETS						SPEC. TD 604

R/48195/H.T

9. All torque handles can now be tested on the run down fixture model no. 50132, use appropriate adapters to test each torque handle and release handle immediately when the stop loading light illuminates. Take an average of five readings for each handle. The following table shows the required values.

TORQUE HANDLE	TORQUE VALUE (NM)
Hose End Fitting 7/16" & ½" Whit	30.5 to 38.5
Hub Adaptors 7/16" Whit	48.5 to 59.5
Banjo Bolts 3/8" Whit	24 to 30
Swan Neck Fittings 3/8" Whit	24 to 30
G 1/8" Blank Plugs	24 to 30
G 1/4" Blank Plugs	48.5 to 59.5

If any of the torque handles are out of tolerannce then record handle type and torque value on control sheet. Call quality engineer if torque handles need adjusting.

10. Disconnect transducer model no. 50028 DES and return all adaptors to box.

11. Disconnect amplifier model no. 50028 on rear of meter and replace with amplifier model no. 50135 (with writing on amplifier to face same way as writing on back of meter). Return amplifier to storage box.

12. Connect din socket on rotary transducer model no. 50135 to din socket on meter.

13. Switch transducer capacity to 10

14. Press circuit test button and read output, reading must be less than 10; if reading exceeds 10 then call quality engineer.

15. Set main control panel to memory auto cancel position.

16. Connect rotary transducer model no. 50135 into air wrench 2D89 - AX and connect 6mm hexagon adaptor to base of transducer using female - female adaptor supplied.

17. All 2D89-AX air wrenches can now be tested, use practice piece of tinware and 6mm screw with plain washer to check wrench (do not use nyloc type nuts), take average of five readings per wrench by running screw up and down thread. The following table shows the required values.

		TORQUE VALUE(Nm)
2D89-AX	TORQUE WRENCH	7.0 to 8.7

18. Return torque meter and accesories to inspection department and ask quality engineer to put meter on charge.

APPENDIX 6

Showing an example Job Information Sheet

for assembling the hub and shaft at Station 1.

SHEET No 8 OF 14.	JOB INFORMATION SHEET		PART No SEE BELOW
TITLE	375 TECREEL	OPERATION No	36
PRODUCT		WORK AREA	130
MACHINE		STD TIME	SEE BELOW
MATERIAL		QTY PER HR	
DRG ISSUE No	26	SHEET ISSUE No	B
ISSUED BY	T KITT	DATE	22.11.90

OPERATION	HUB AND SHAFT ASSEMBLY			
TOOLING				

SKETCH/METHOD OF WORKING

ASSEMBLIES COVERED BY J I S

TR 31800;	TR 38000;	TR 45700;	TL 31800;	TL 38000;	TL 45700;
TR 31810;	TR 38010;	TR 45710;	TL 31810;	TL 38010;	TL 45710;
TR 31819;	TR 38019;	TR 45719;	TL 31819;	TL 38019;	TL 45719.

STD TIME

Ensure hub and shaft are thoroughly clean and free from defects. Wipe hub bore and shaft journals, blow out with air as necessary. *

Check for existence of threads in all tapped holes.

Assemble SPIROL pin to shaft with punch F441012 and wooden vee block. Assemble spring arbor.

Fasten 2 off blank plugs to shaft end. Use loctite 542 as necessary, allowing a minimum 1 hour curing. Use AT 84087 to assist. Fasten with calibrated torque wrench 54Nm.

Identify right hand or left hand assy. Assemble hub with adaptors (2 off); blank plugs (2 off) and bonded washers (4 off). Ensure washers and sealing faces are in good condition. Use tool AT 84085 to assist where necessary. Stamp letter "A" to the hub positions adjacent to G 3/8" outer ports. Adaptors and blank plugs to be secured with air torque wrench, tightening torque 54Nm.

* To ensure cleanliness, test rig oil and filter to be changed on a regular basis of 3 months.

APPENDIX 7

A tentative time schedule for the VA study.

TENTATIVE TIME SCHEDULE (1991)

NO	TASK	MARCH 4	11	18	25	APRIL 1	8	15	22	29	MAY 6	13	20	27	JUNE 3	10	17	24	JULY 1	8	15	22	29	AUGUST 5	12	19	26
1	Feasibility study	----------																									
2	Conceptual design			----------																							
3	Evaluation of alternatives						----------																				
4	Design draft										----------																
5	Elaboration (detail design												----------														
6	Prototype manufacture														----------												
7	Testing																	----------									
8	Finalise report and documentation																							----------			

DETAILED TECHNICAL AND COST ANALYSIS OF IDEAS FORMULATED DURING THE TECREEL VALUE ANALYSIS

A7.1 Hub

Figure A8.1 shows the existing hub design. It is made out of cast iron and costs £18.50 to produce. As already mentioned, this design is relatively complex and, because of asymmetry, it is relatively difficult to cast and machine. The hub also has four oil outlet ports. However, depending on the handing of the Tecreel, only two ports are used and the other two are redundant and have to be blanked off during assembly. In special cases where a customer specifies the handing in advance, it can be arranged to machine only two ports.

The proposed new hub design is shown in Figure A8.2. This design exhibits a much simpler form design, it is symmetrical and, therefore, easier to cast, set up and machine. Also the redundant ports are eliminated by centrally positioning the remaining two ports such that (together with a new design for end fittings - the same ports can be used for both left and right hand Tecreels by simply adjusting the position of the hub relative to the shaft (see Figure 6.2).

H0: Existing Hub design. £18.50

FIGURE A7.1

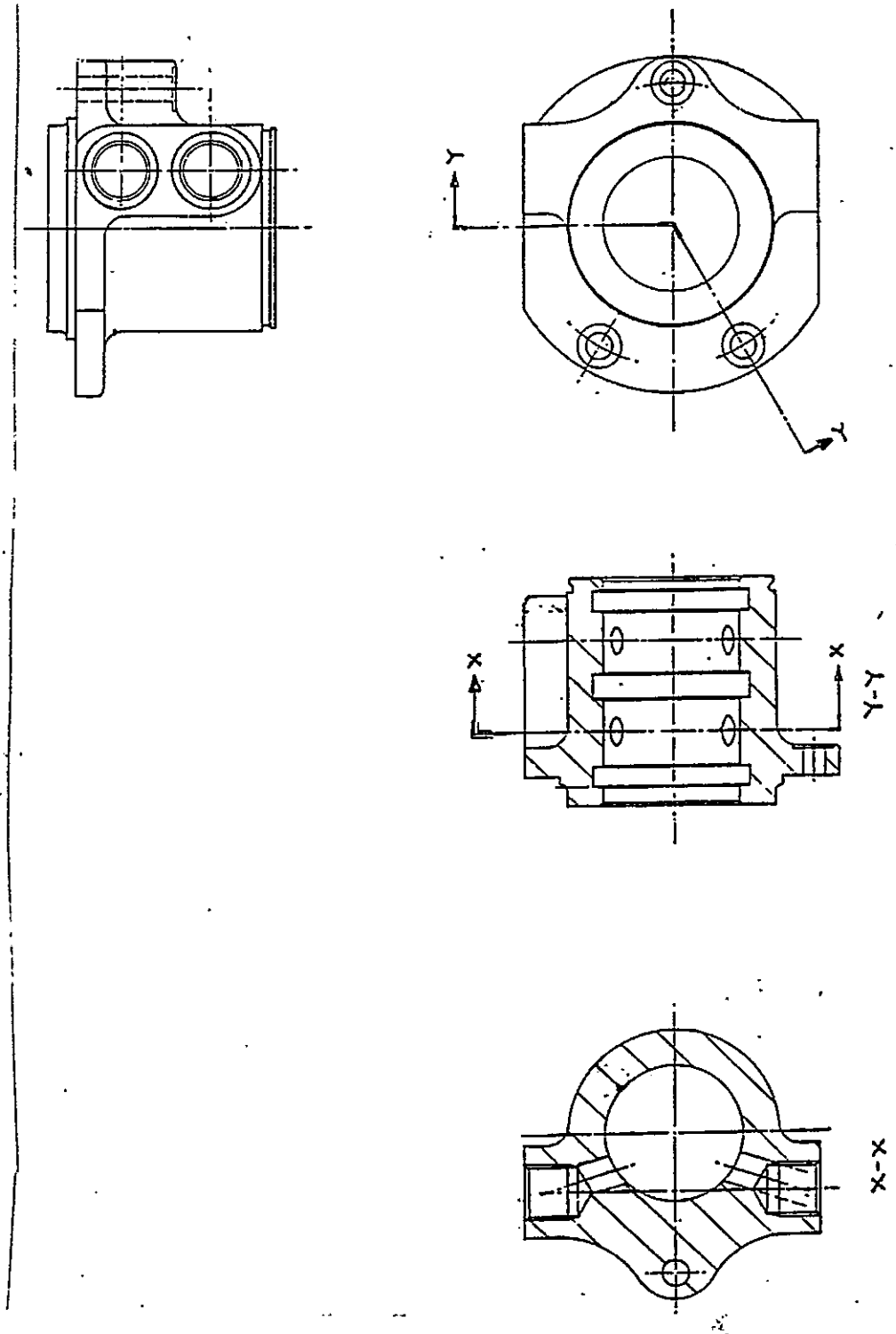

H1: Design based around Type 4 with no grooves in Hub £12.66

FIGURE A7.2(a)

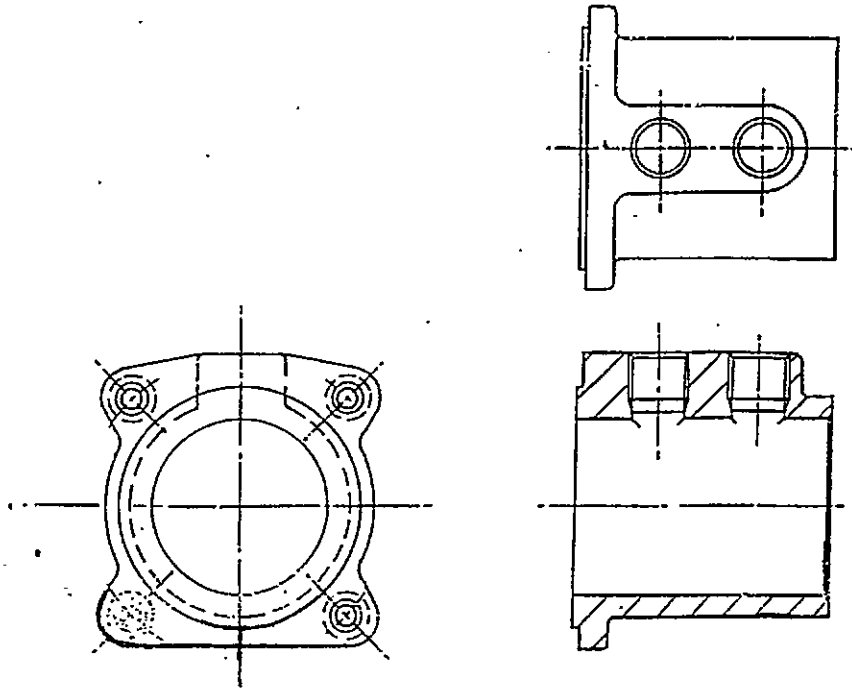

H2: Design based around Type 4 with All grooves in Hub £10.02

FIGURE A7.2(b)

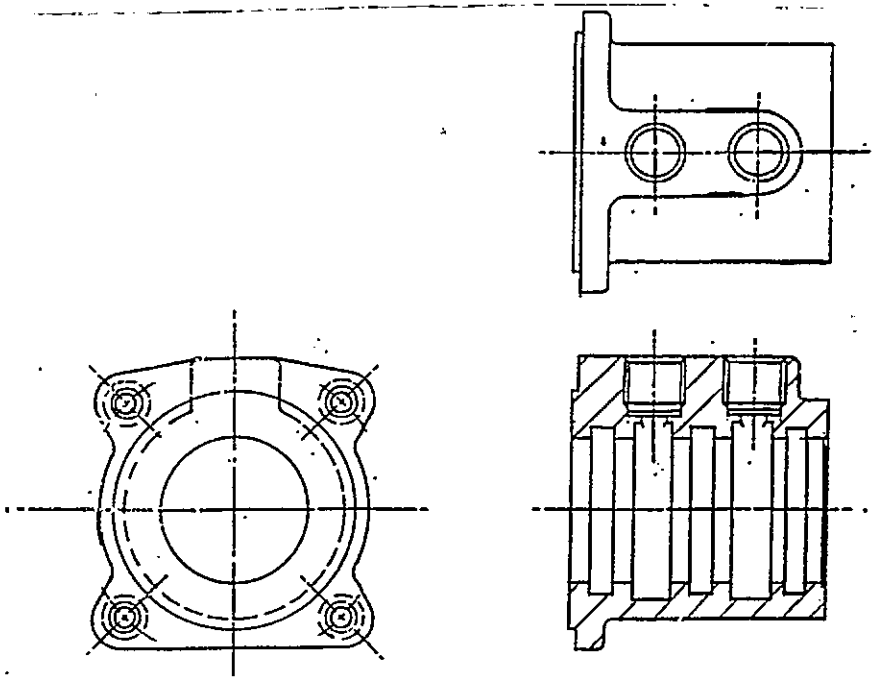

There are three possible variations of this design depending on whether the seal or oil grooves or both are machined in the hub or on the shaft. Figure A7.2(a) shows the design with no grooves in the hub - design H1, and Figure A7.2(b) shows the design with all grooves in the hub - design H2. The other variations - design H3, which is similar to the existing design would be when only the seal grooves are in the hub (with the oil grooves on the shaft).

Apart from the fact that it is relatively easier to achieve and control the dimensions of the grooves on the shaft rather than in the hub, there is no evidence at the moment to suggest that the location of the grooves has any effect on the performance of the Tecreel in terms of sealing life.

The works cost indicated for each design is an estimate based on time study data and taking into consideration eliminated and/or additional operations, components and material cost. It is noted that all the alternatives are cheaper than the existing design.

It is estimated that the new casting pattern will cost £3,000.

A7.2 Shaft

Accepting the proposed hub designs as given, different shaft designs were conceived to suit each of the hub variations. The following options were considered:

A7.2.1 Retaining existing shaft design - SO (Figure A7.3(a))

This option was considered because (as will be shown later) the envisaged changes in shaft design inevitably lead to changes or modifications to existing Tecreel mounting methods, requiring mutual consent of the customer. Because the reactions of the customers to such changes is unknown at the moment, it was felt safe to allow for the possibility of retaining the existing shaft design, in case the customers react negatively to the proposed mounting changes.

This shaft design would be compatible with the modified hub design, based around Type 4, with only the seal grooves in the hub - design H3.

A7.2.2 New shaft designs

On the existing shaft design, oil flow and isolation is achieved via cross drillings at right angles. The holes running longitudinal to the shaft are blanked off on assembly and oil is fed in and out through the side holes. In the conception of alternative designs, the overriding criteria was to challenge this need for cross-drilling and the use of blanking plugs. This resulted in a design where oil is fed in and out directly via two longitudinal holes, thus eliminating the need for the side holes and blanking.

Two basic new shaft designs are proposed to suit the various hub designs:

- A design with all grooves (i.e. seal and oil grooves) on the shaft and
- A design with no grooves on the shaft (all grooves put in the hub)

For each of these basic designs, two variations have been considered:

- A design adapted for a bolted on mounting bracket and
- A design adapted for a welded on mounting bracket,

giving a total of four alternatives (Figures A7.3(b),(c),(d) and (e).

Scaled drawings have shown that space required to accommodate two $^{3}/_{8}$" BSP hydraulic hose adaptor fittings (used to connect the hydraulic hoses to the shaft ends) will necessitate an increase in the stock size of the shaft from 50 mm to 55 mm diameter. However, the design changes allows for the shortening of the shaft by approximately 30 mm and it is hoped that a net saving in material will result.

No.	IDEA	DRAWING
S0	EXISTING DESIGN £ 17.24	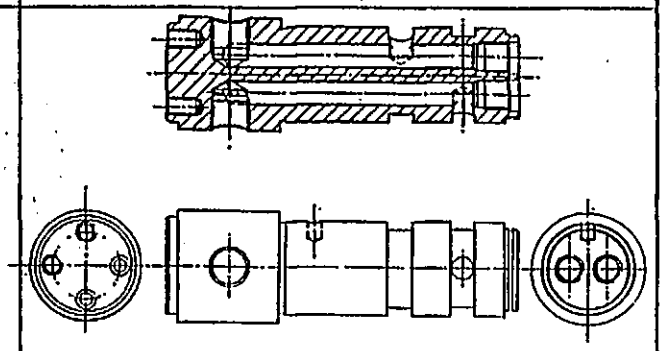 5a).
S1.1	DESIGN WITH ALL GROOVES ON SHAFT • Suitable for • Screwed on bracket £ 15.50	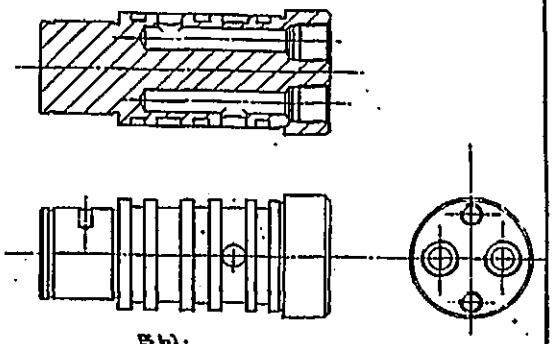 5b).
S1.2	DESIGN WITH ALL GROOVES ON SHAFT • Suitable for Welded on bracket £ 15.50	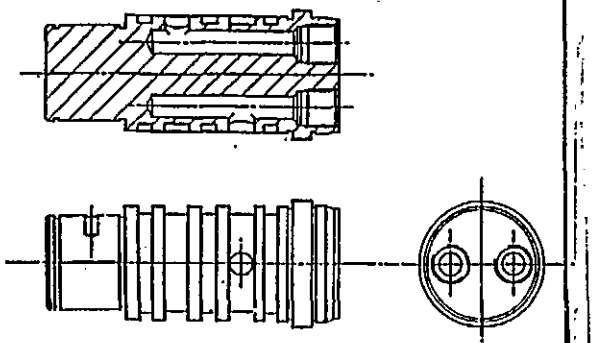 5c).

No.	IDEA	DRAWING
S2.1	DESIGN WITH NO GROOVES ON SHAFT (All grooves in Hub) • Suitable for Screwed on bracket £ 12.51	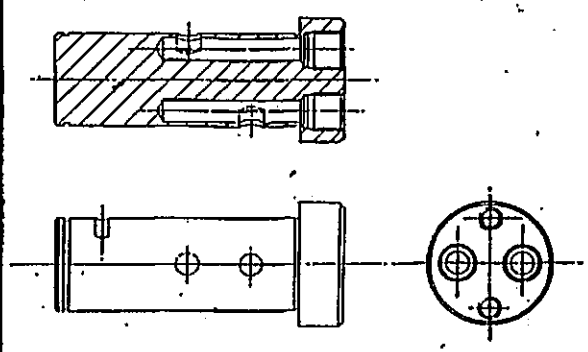 5d).
S2.2	DESIGN WITH NO GROOVES ON SHAFT (All grooves in Hub). £ 12.51	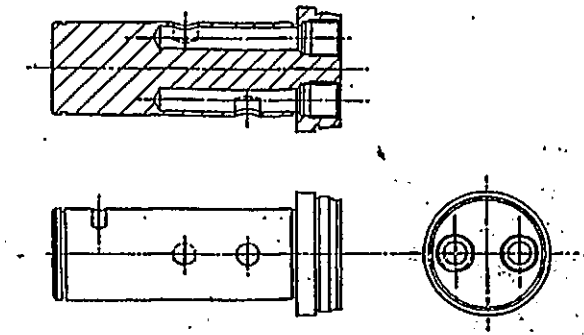 5e).

FIGURE A7.3: SHAFT DESIGNS

For designs intended for use with bolted on brackets, it is proposed (primarily because of space constraint) to use two M10 screws to fasten the bracket to the shaft, instead of four M8 screws, as used on the existing design.

The new shafts have also been designed to allow the use of the existing plastic spring arbor. This was considered necessary in order to avoid unnecessary expenditure on new moulding tooling.

As for the hubs, an estimate of the works cost for each alternative was calculated on the basis of time study data and, taking into consideration eliminated and/or additional operations, components and material cost. It is noted that all the alternatives are cheaper than the existing design.

Also, cursory consideration was given to the possibility of replacing the existing design with a steel tube. However, practical problems on how to attach the hydraulic hoses and other parts to the tube, and the risk of the tube buckling on heat treatment, casted serious doubts on the viability of the idea.

A7.2.3 Challenging the need for hardening the shaft

On the existing design, the shaft meterial is EN32M. This is a soft steel (hardness less than 10 Rockwell C) with low bearing strength. Also, it is not particularly suitable for use as a structural member, as in the current application. It was probably selected in the first place because of its good machinability.

In order to improve its wear properties and life, and ensure proper sealing, the shaft is induction hardened to 55 Rockwell C to a depth of 0.25 mm. However, this hardness figure is arbitrary and the minimum hardness to guarantee adequate life has not been established.

While adequate wear resistance is important, hardness is not the only factor influencing the sealing process. Equally important are:

- Machining data: Housing tolerances (excentricity, concentricity, surface finish), radii, size of extrusion gap and installation chanfers.

- Variations within the seal itself.

Hardening has to be done after machining. Inevitably this affects the machining data. The provision of a finishing allowance has not been very effective so far because the current finishing operations (Grinding and Buffing) are out of control, and a new buffing machine (with in-process control) would probably be required to bring the process under control.

With this background in mind and the possibility that the currently demanded hardness is unnecessarily high, it was felt that probably by selecting a better material with adequate initial hardness, it might be possible to eliminate the need for hardening without compromising functional requirements. Two alternatives have been considered:

A7.3 Roller Burnishing (for technical details see Appendix 14)
The possibility of 'Roller Burnishing' the shaft after machining provides the most promising solution so far. It is believed that Roller burnishing, which is a cold working process, is capable of accurate sizes and good finish (well within Tecreel requirements), and a surface hardness increase of between 5% to 10% with a penetration of 0.254 mm to 0.762 mm. In consultation with materials experts, a suitable steel - EN8M, tempered to the 'R' condition, has been selected for trials. This material has good machinability and a reasonable initial hardness of between 20-25 Rockwell C. Preparation of shaft samples for tests is currently under way.

If successful, this process will eliminate the hardening, grinding and polishing operations, giving rise to an annual saving of approximately £20,000.

The Burnishing tool is estimated to cost £700.

Use of Hardened Bushes

Another idea which was considered is the possibility of using hardened bushes, press fitted on a straight shaft to form grooves and a polished hardened surface. However, no standard hardened bushes to suit our requirements could be identified. Ordering them as specials was found to be expensive. Moreover, a number of bushes of different sizes and stepped shaft design would be required, and the envisaged process for accurately assembling the bushes to the shaft was complicated and difficult. For these reasons, this idea has been dropped.

A7.1.5 Bracket design and mounting considerations

Alternative bracket designs were considered to suit the various shaft designs and mounting possibilities (see Figure A8.4).

Considering the design of the shaft, two basic bracket designs evolved:

- A bracket design intended for assembly to the shaft using screws, and
- A bracket design intended for assembly to the shaft by welding.

See Figure A8.6 for variation on bracket designs.

FIGURE A7.4: ALTERNATIVE MOUNTING CONSIDERATIONS

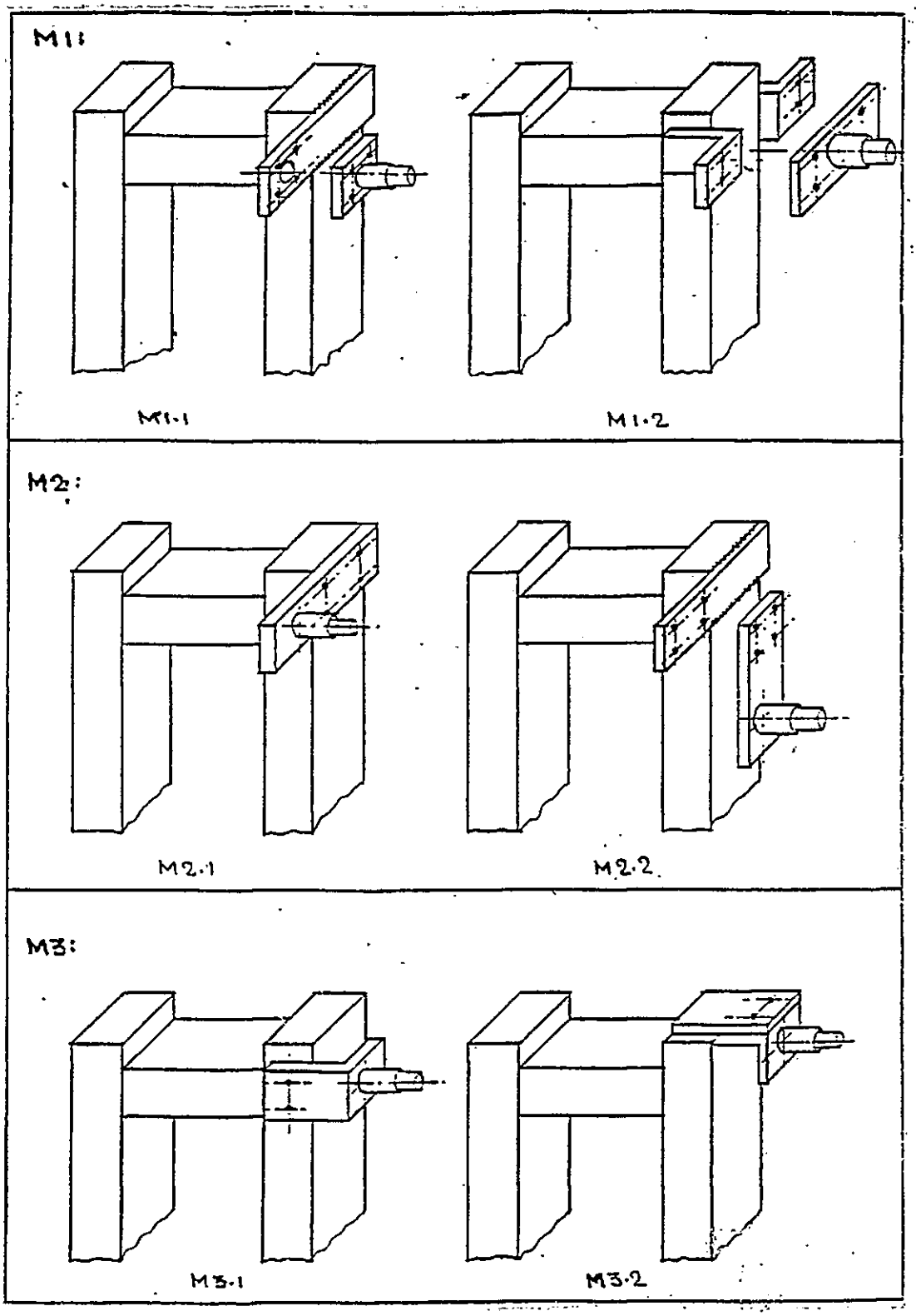

On mounting considerations, physical observations on forklift trucks (and from catalogues) revealed that different forklift manufacturers mount the Tecreel in a number of different ways. It was noted that in most cases, the Tecreel is mounted on a supplementary bracket, usually welded to the mast. The design of this bracket (and by implication - its cost) varies greatly. On the basis of these observations, and due to the lack of exact mounting details for all the customers, several hypothetical but realistic possibilities of mounting the Tecreel were drafted to represent the way in which the majority of customers would do it (Figure A7.4). Taking this information into account, four bracket design variants for each of the two basic designs mentioned above evolved.

Existing bracket design - BO (Figure A7.5)

This design would suit the existing shaft design, and it was considered to be a viable option. It is also suitable for existing mounting methods.

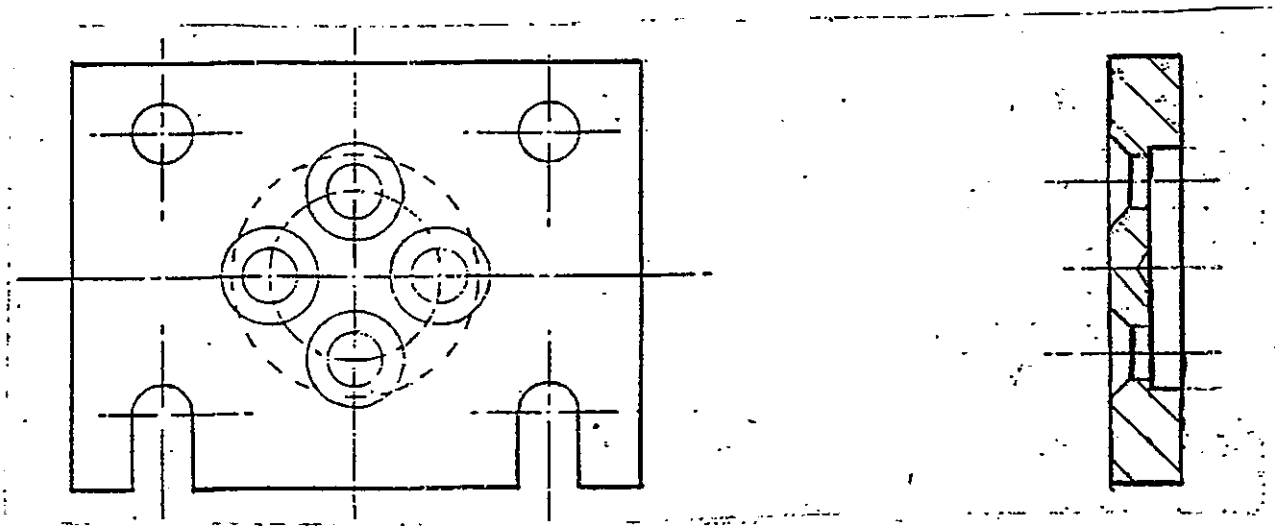

FIGURE A7.5: EXISTING BRACKET DESIGN

Right angled bracket - B1 (Figure A7.6)

This was considered to provide probably the best solution to mounting a Tecreel with a modified shaft design where the hydraulic hoses are connected longitudinally to the shaft end and have to go through the bracket since it avoids the need to drill big holes in the mast to accept the hoses.

A welded version of this type of bracket is already being used on the Type 4 Tecreel. It is suitable for mounting methods M3.

FIGURE A7.6: SHOWING DETAILS OF VARIOUS BRACKET DESIGNS

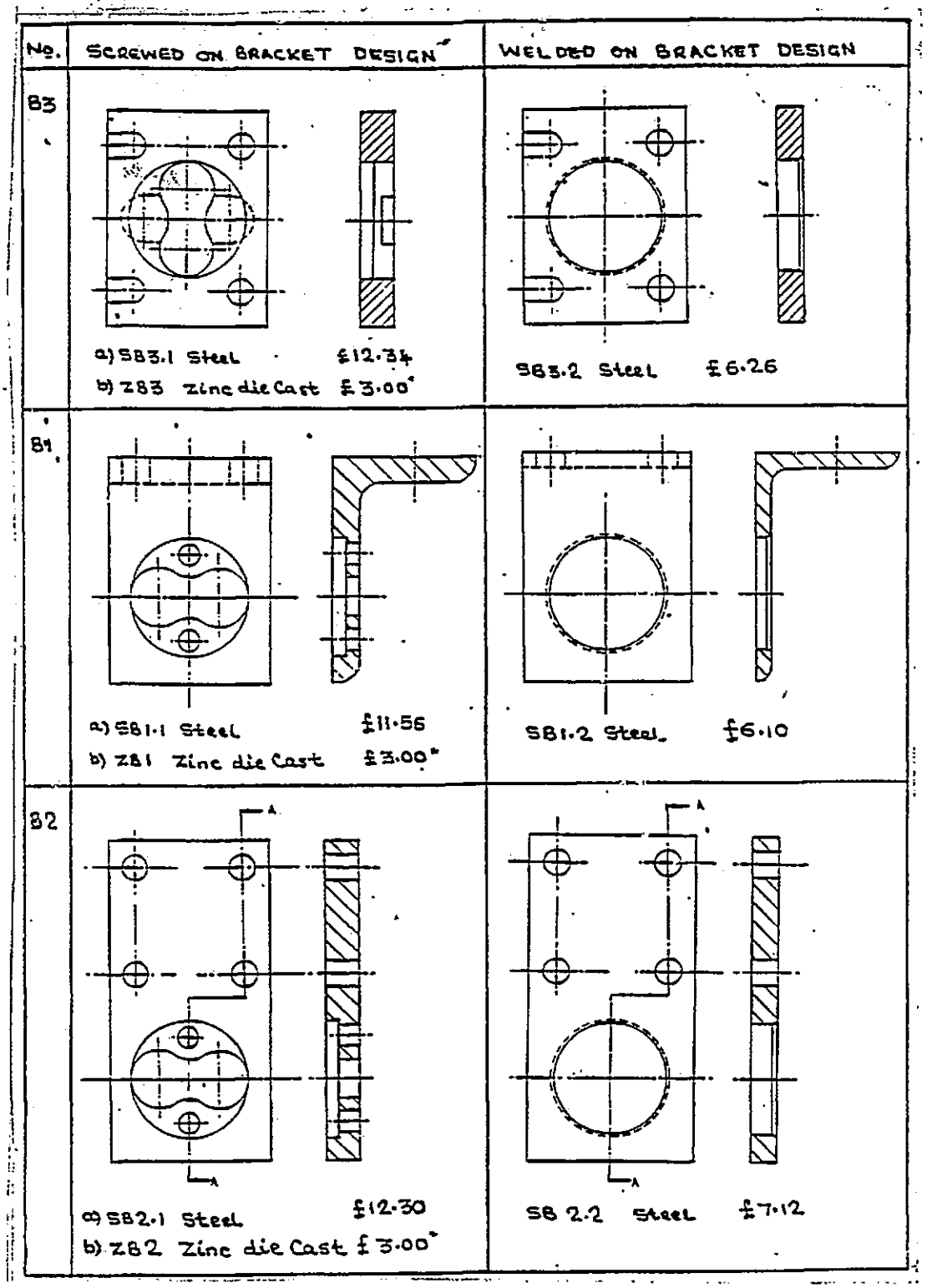

Square bracket - B3 (Figure A7.6)

This is a modified version of the existing bracket and is designed to suit the new shaft designs where the hydraulic hoses have to be connected to the shaft end and go through the bracket. It is suitable for mounting methods M1 and customers might have to provide an extra hole (big enough to take the hoses) on their mounting bracket.

Rectangular bracket - B2 (Figure A7.6)

This is a logical iteration from the square bracket design. It provides more options for mounting a Tecreel with the new shaft design. It is suitable for mounting methods M2.

Special considerations

So far, it has been assumed that all customers use the bracket supplied with the Tecreel. However, Lansing Linde Ltd, probably the largest single customer of the 375 Tecreel, do not use this bracket. Also, they are the only customer for whom we have definite mounting details. This case therefore deserves special consideration.

Lansing mounts the Tecreel on a purpose designed guard (Figure A7.7) mounted to the forklift mast. The Tecreel is mounted to this guard by directly securing the shaft to the Boss (item 2) using four M8 screws.

If, for example, any of the new shaft designs is adopted, then modifications will have to be made to the guard to suit the new shaft. Two such modifications which are unlikely to make the guard any more costly are proposed for consideration.

(a) Eliminating the Boss (item 2) and instead providing four mounting holes to suit a square bracket design (Figure A7.8).

Despite the fact that Lansing Linde will now have to buy the bracket as well, it will be shown later that they will pay at least £2.00 less for the Tecreel in comparison to the situation whereby the existing shaft design is retained and they do not buy the bracket.

(b) Eliminating the Boss (item 2) and replacing it with two welded on steel brackets with through holes as shown in Figure 9.2, thus allowing direct mounting of the shaft to the guard using two M10 screws. This seems to be the cheaper of the two options, since Lansing do not have to buy the bracket. Again, Lansing can make an extra saving of up to £5.00, compared to a situation where the existing shaft is retained and no mounting changes are made.

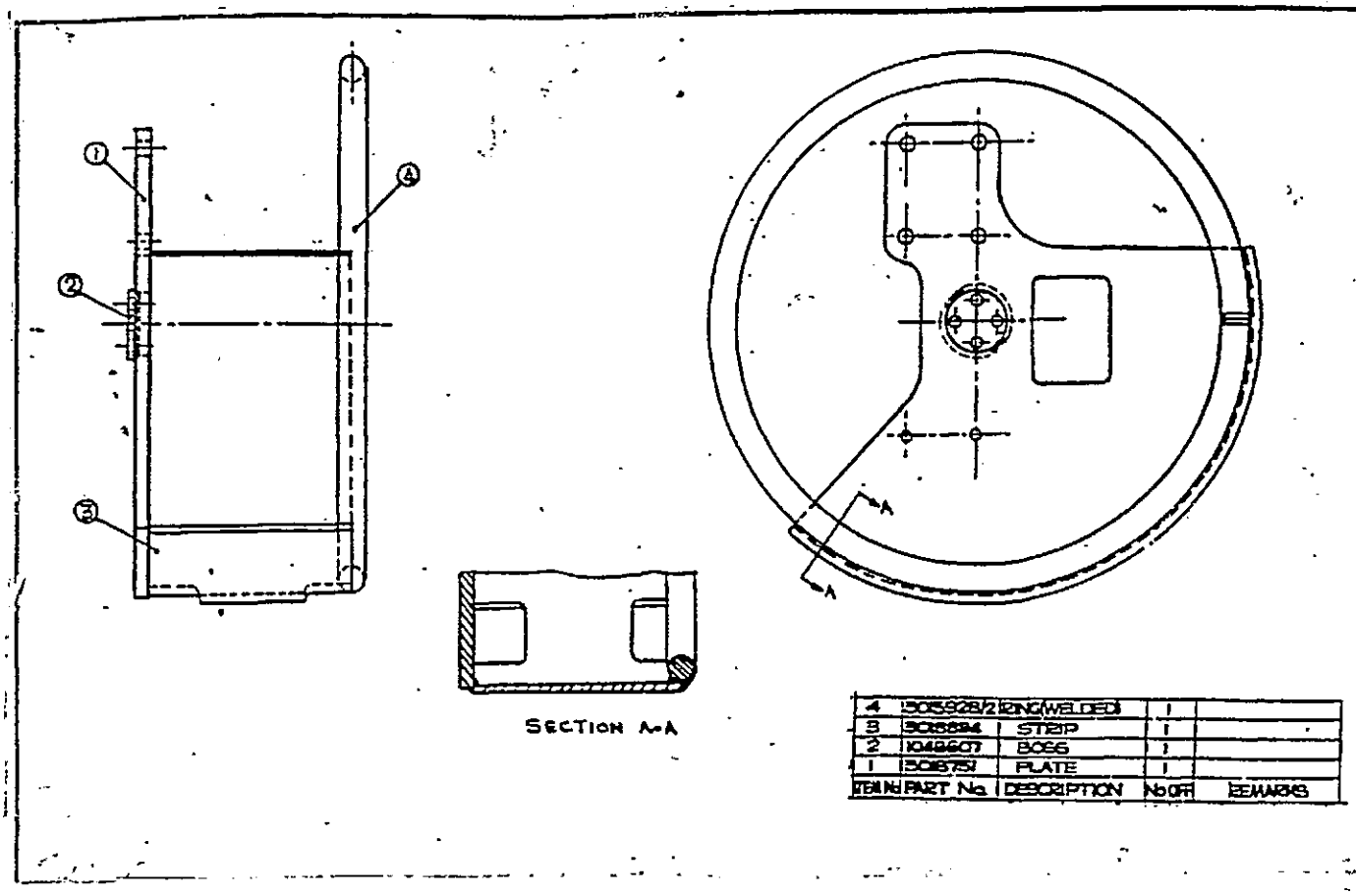

LMO: Existing Lansing Mounting

FIGURE A7.7

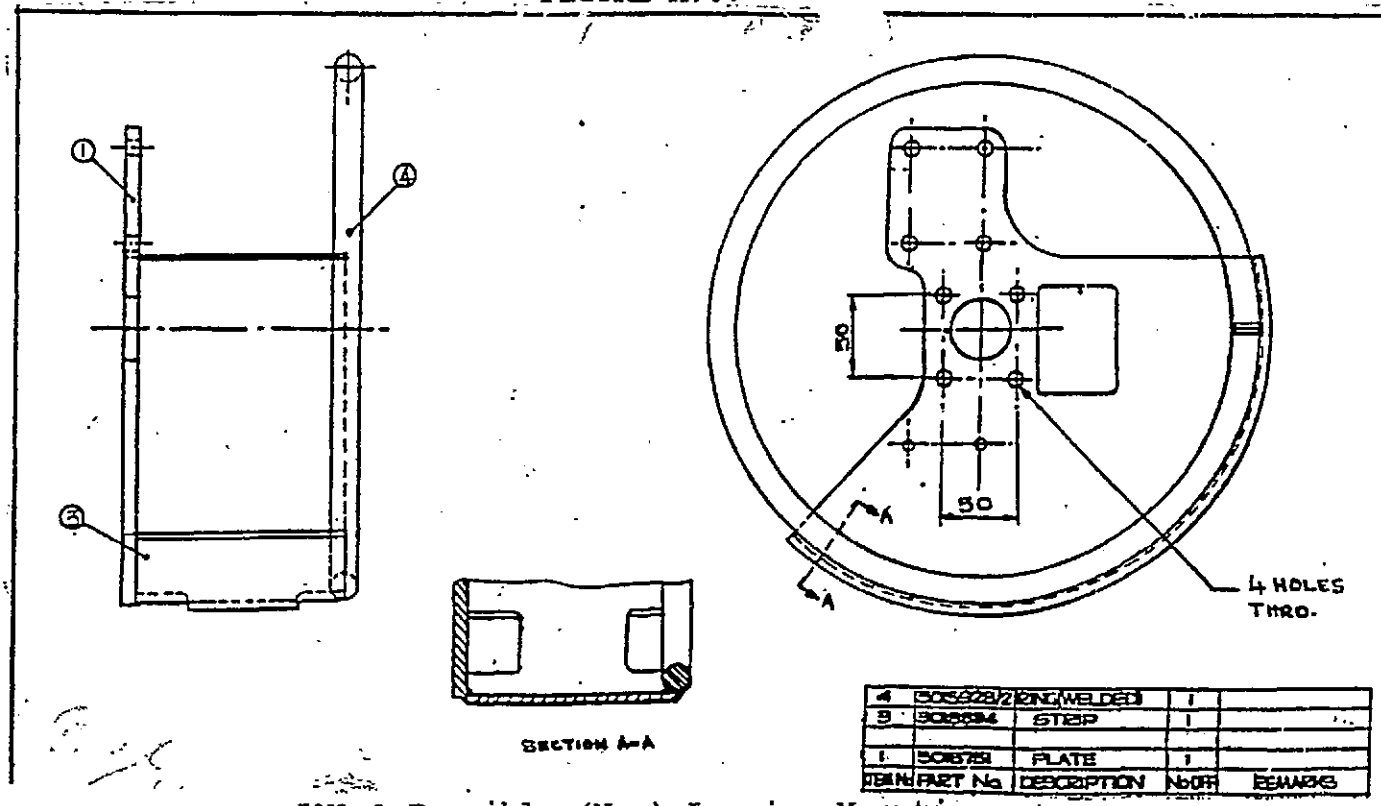

LM1.1 Possible (New) Lansing Mounting

FIGURE A7.8

LM1.2 Possible (New) Lansing Mounting

FIGURE A7.9

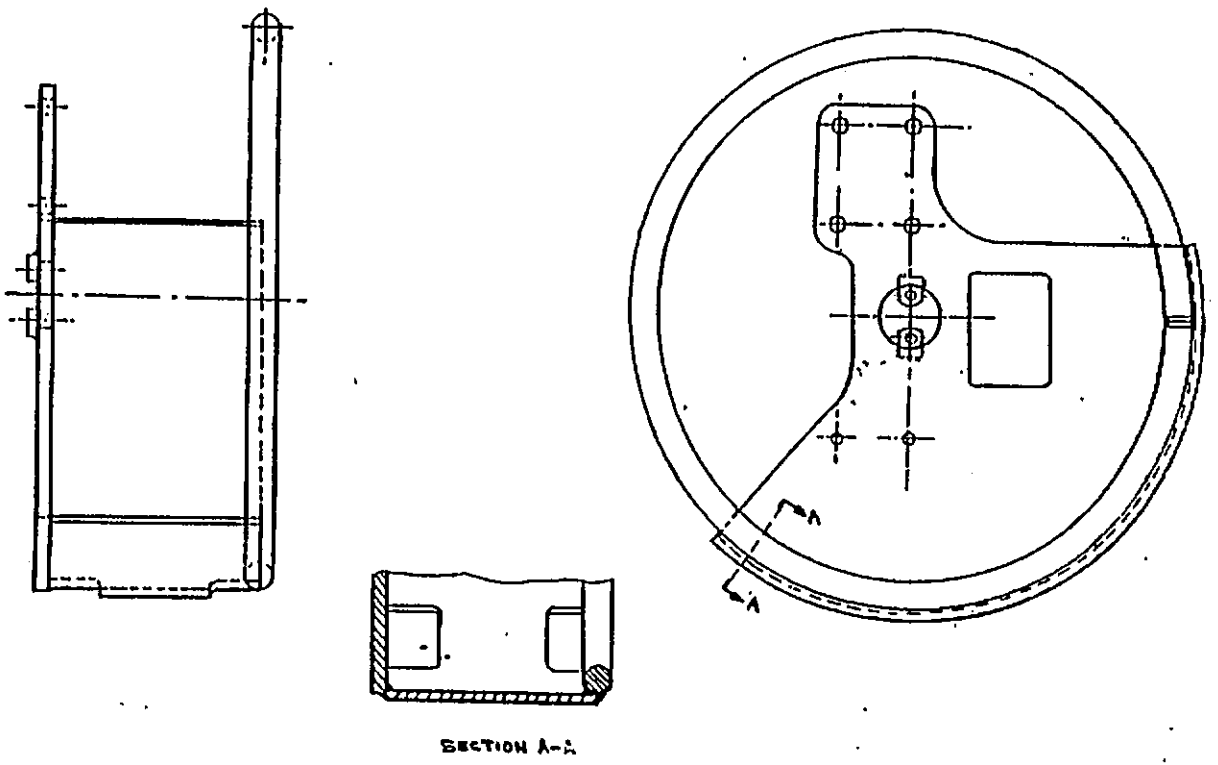

Zinc die cast bracket

Consideration has been given to alternative materials and production methods for the mounting bracket. The existing bracket is machined out of mild steel plate and costs £9.87. The possibility of producing the bracket by a die casting process seemed to provide a cheaper alternative and investigations into this had been going on even prior to the current study. Because of its strength properties, zinc alloy (to BS1004A) was identified as a suitable material and a sample bracket (based on the existing design) was manufactured and subjected to tests on the Tecalemit test rig. So far, the bracket has completed 100,000 life cycles without any visible signs of failure. These results have been obtained at ambient temperature conditions and under virtually vibration free operation. As such, more tests are still required, particularly under cold storage (up to -30°C), and realistic operating vibration conditions before its suitability can finally be ascertained. Results so far indicate that it is going to be a successful idea.

If found suitable, the zinc die cast bracket represents the largest single saving of the V.A. Quotes from two different suppliers show the cost of the bracket to be between £0.66 and £1.25, compared to the current cost. This represents an annual saving of between £55,200 and £51,700. Even by considering the modified bracket designs estimated to cost more at approximately £3.00, the annual saving is still high at £41,200.

The respective tooling costs are £6,642 and £18,500. The capital recovery (break even) time is 1.5 and 5 months respectively.

The zinc die cast bracket is suitable for securing to the shaft, using screws.

A7.4 Other Tecreel components

The proposed changes to the other Tecreel components, such as the spring, tinware, fittings etc. are such that the assembly features of these components are universally compatible with all hub and shaft variations. Therefore, the design changes and, hence, cost savings made on these components, are applicable and can be realised on any of the possible hub, shaft and bracket design combination.

A7.4.1 Spring

As previous investigations had indicated that alternative hose retraction systems which do not require the use of a spring (i.e. the use of a hydraulic motor etc.) are more complex and costly, efforts were concentrated at identifying alternative cheaper suppliers of, and testing new springs.

There are two types of springs used on the Type 375 Tecreel:

- The general purpose spring - part no. 31485-208 and
- The special Lansing spring - part no. 31485-216.

(a) General purpose spring

The existing spring is supplied by Tempered Spring at a cost of £15.03. The average life of this spring is 15,000 cycles (range between 12,000 - 20,000 cycles). Two new potential suppliers have been approached:

- Gbdr Schmidt: Who can supply the spring at a cost of £12.16 each. When subjected to life tests, the first sample failed after 3,300 cycles.
- George Emmot: Who can supply the spring at a cost of £12.85 each. On test, the first sample failed after 17,800 cycles.

More samples of each are to be tested, but the initial results indicate that the George Emmot spring is more promising. If successful, the potential saving would be £2.17 per spring.

Currently, George Emmot are investigating modification of their spring to increase the number of turns. In the process, it is expected that the cost of the spring will be further reduced. However, the modifications may affect its life.

(b) Special Lansing spring

As for (a) above, the existing spring is supplied by Tempered Springs at a cost of £17.87. Its average life is 29,000 cycles (range between 22,000 and 60,000 cycles). Only one new prospective supplier - George Emmot - has provided a sample for test. The first sample completed 58,000 life cycles. This is well within the desired range, but further tests are required and more samples have been ordered.

This spring will cost £11.06, resulting in a saving of £6.81 each.

A7.4.2 Spring location pin

The existing spring location pin (item 5d on Figure 1) is manufactured in-house and costs £1.041 to produce. The pin has a head on one side and is secured in position axially using a circlip on the other end. The circlip costs £0.007, giving a total assembly cost of approximately £1.05. It is proposed to replace this assembly with a standard plain dowel pin with self grip circlip on both ends. Based on a requirement of 700 assemblies per month, the prices are expected to be as follows:

- 1-off BONEHAM & TURNER DOWEL PIN - $^{1}/_{4}$" x $1^{3}/_{4}$" long
  at £0.72/10 pieces = £0.072 each

- 2-off SALTERFIX TRUARC CIRCLIPS - 5555-25
  at £33.50/1000 pieces = £0.067 each

The cost of the assembly will, therefore, now be £0.139. Since the dowel pins have to be zinc plated, the final cost of the assembly is estimated to be £0.15. Compared to the current cost, the expected saving in each assembly is £0.90 or £7,560 annually.

A7.4.3 Tinware

New ideas considered with respect to the tinware are of two categories:

- The use of plastic moulded parts
- Direct modifications to the existing steel plate tinware.

(a) Use of plastic moulded parts

A feasibility study into the possibility of replacing the tinware with plastic moulded parts had been carried out as part of the 'futuristic' Type 5 Tecreel design. The main advantage of using plastic is that plastics are cheap and have low specific weight. The feasibility study can be found in Appendix 11 and includes the types of moulding and plastics that can be used and various design configurations with market considerations.

Vacuum, rotational and injection moulding techniques were considered. Rotational moulding was rejected because of the difficult shape of the parts to be moulded. Because of low prototype and production tool costs, vacuum moulding was considered most suitable for an initial production run. Injection moulding was considered to be the most viable process in the long term, despite the very high initial tooling cost, since, with proper re-design of the parts, this process promised the cheapest unit cost compared to the other processes.

The main features of the proposed plastic designs are as follows:

- Spring can and cover

It is proposed to replace the existing arrangement by two identical halves (Figure A7.10).

The advantages of the new arrangement are that the same spring assembly can be used for both left hand and right hand Tecreel assemblies. Also, only one moulding tool set would be required.

FIGURE A7.10: Spring Can in identical halves

(a) Moulded Plastic

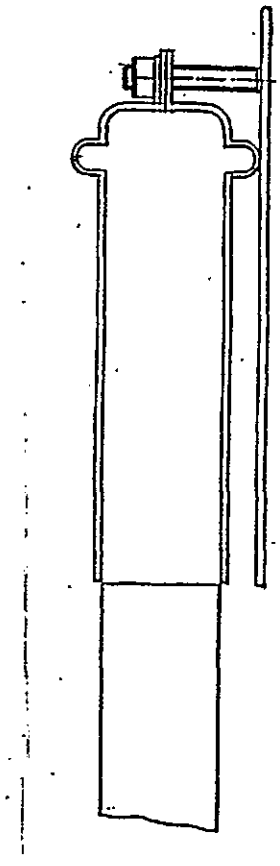

(b) Pressed Tinware

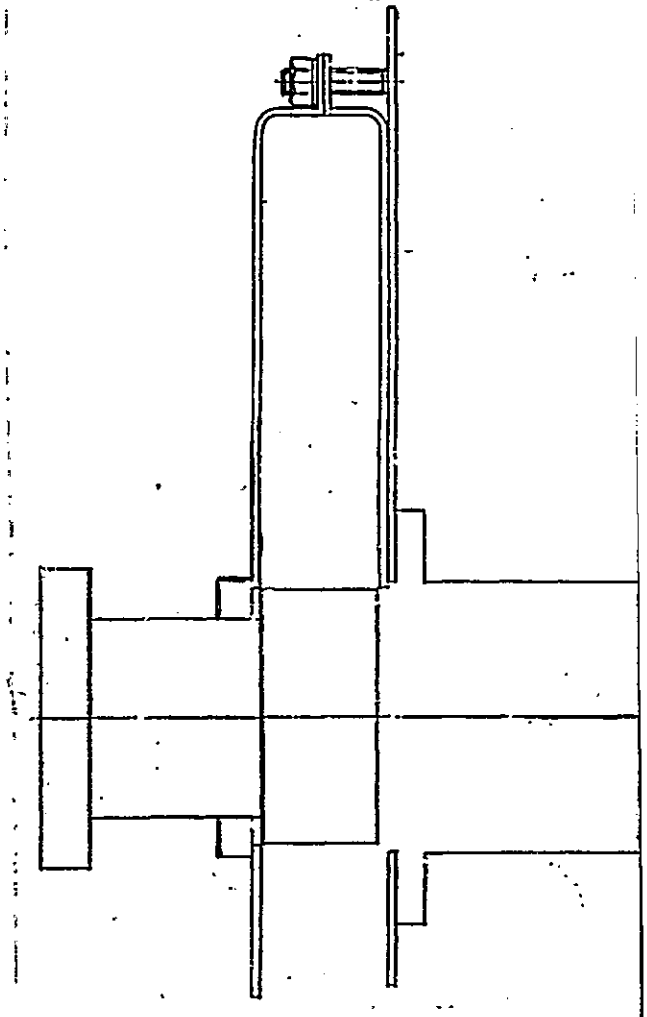

- Drum and flange assembly

It is proposed to replace the existing arrangement by two identical halves with a horseshoe centre supported on inserts. Again, the advantage of having identical halves is that only one tooling set would be required.

Tentative designs for plastic moulded spring container and drum and flange assembly were prepared and submitted to prospective manufacturers for quotations. The following pricing was obtained from AMC Moulding of London:

- SPRING CAN

  Material: grade GE XENOY 5730

  Price: £2.35 x 2 identical halves = £4.70

  Estimated tooling cost: £7,000

Compared with the steel spring container and cover which costs £7.72, the plastic option offers a saving of £2.52 per Tecreel. For a production rate of 700 Tecreels per month, this is equivalent to an annual saving of £21,168. The approximate recovery period for the tooling cost would be four months.

- DRUM AND FLANGE ASSEMBLY

  Material: grade GE XENOY 5730

  Price: £5.25 x 2 identical halves = £10.50

  Horseshoe centre: £1.15

  Inserts: £0.50 x 8 of = £4.00

  Total Cost = £15.65

  Estimated tooling cost:

  (a) Flanges: £21,000 for a 3 impression mould. This mould would cover all three sizes (i.e. 318,380 and 457 mm diameter flanges).

  (b) Horseshoe centre: £7,000.

Again, compared with the existing steel plate design which costs £18.72, the plastic option offers a saving of £3.07 per Tecreel, or an annual saving of £25,788. The approximate recovery period for the tooling cost would be 10 months.

The suitability of the selected material to withstand operating environmental conditions and applied forces will have to be determined through trials.

(b) Direct modifications to existing steel plate tinware

The replacement of tinware by plastics can be considered to be a futuristic idea. Its implementation requires a substantial amount of investment. Also, it is yet to be proved whether plastics can withstand the desired operating environment and stresses. Moreover, the market reaction to a plastic Tecreel is not known at the moment. As such, the introduction of plastic parts to the Tecreel will have to be a gradual process, probably starting with the spring container which is lowly stressed and fairly safe from misuse (e.g. from banging) during operation.

For the immediate future, the following direct modifications to the existing steel plate tinware were investigated:

1. Consideration was given to the replacement of the existing spring container and cover by two pressed identical halves. However, in comparison to the expected saving of £0.21 per Tecreel (£1,764 annually), the new tooling cost - expected to be up to £5,000 (break even three years) could prove prohibitive.

   Nonetheless, as for the plastic option, this idea would permit the same spring container assembly to be used on either right or left hand Tecreel assemblies.

2. The possibility of spot welding the flange and drum together to replace the current assembly method using weld nuts, bolts and washers was investigated. Assuming it takes approximately the same time to do the spot welding as it takes to weld the nuts on the flange, then the saving (on fasteners and assembly time) would be £1.22 per Tecreel. Strength tests on a number of samples have so far proved successful.

   Due to increased weight, a slight handling problem is expected, especially during painting which is done manually. Some paint starvation was observed in the joint, but this is not considered to be a very serious problem, since the paint-starved area is covered by the hose anyway.

3. The possibility of reducing the flange and drum steel section from the current size of 14 SWG to 16 SWG and strengthening it by upsetting to provide ribbed sections was also considered.

   Initial estimates from T J Filters (a sister company), indicated that this would result in a direct saving of about £0.28 per tinware (or £4,704 annually). However, problems envisaged with burrs on blanked/pierced holes and difficulties in maintaining sizes and tolerances on forming and cutting casted serious doubts on the suitability of the idea.

   Additional tooling cost needed was estimated at £5,000.

4. Another idea which was considered and dropped was the use of a fabricated spoked flange design to replace the existing flange and drum assembly. A high fabrication cost was expected.

A7.4.4 Hose end fittings

As a consequence of changed hub design, it was also necessary to replace the complicated 90 degree elbow hose end fitting (see Figure 6.1) by a swept bend type fitting, similar to the one used on the Type 4 Tecreel (see figure 6.2), firstly to reduce bending stresses in the fitting and secondly to improve oil flow.

This type of fitting is also expected to be cheaper by £0.15, giving rise to an annual saving of £1,260.

A7.5 Packaging of goods

Numerous ideas aimed at improving working conditions on the assembly line, speeding up the assembly process and eliminating unnecessary cost related to packaging were investigated.

A7.5.1 Use of plastic cable ties

Currently, a piece of string, TYCORD TC2 - supplied by Gordian Strapping, is used to tie the hose, thus keeping it neatly coiled on the drum in transit and during storage. 1.5 m of tycord, costing approximately £0.01, is used per Tecreel.

The replacement of the string by plastic cable ties has proved to be a much faster, more presentable and, from the operators' point of view, a much easier way of securing the hose. Despite being more expensive (plastic ties cost around £0.03), their use is considered to be a better idea for the reasons already mentioned. Moreover, if the last assembly station where this operation is done is fully occupied, a saving in operation time equivalent to £0.36 per Tecreel (or £3,024 per annum) would result. This idea is already being implemented.

A7.6 Pressure testing of hub and shaft assemblies in multiples

Multiple pressure test of hub and shaft assemblies, using an automatic air test rig instead of the present hydraulic test rig, are currently under way at Furness Controls Ltd. It is hoped that, if successful, this will speed up the test process, which at the moment is among the slowest and tedious operations on the assembly line. Using air will also eliminate oil from the assembly benches, thus providing a much cleaner environment.

A7.7 Vertical shotblasting of tinware

Tests into the possibility of shotblasting the flanges by standing them on their ends, thus avoiding the need to turn the tinware over (reducing operation time); and the possibility of shotblasting one side only, were carried out. The tests failed because the tinware fouled the shotblast container. Also tinware distortion occurred. Therefore, this idea was dropped.

A7.8 Packaging material

Currently, the Tecreel is packed in mottled white and screen painted cartons by EPS Ltd. There are three sizes of cartons:

Part no.	Cost
7513-225	£1.838 each
7513-236	£2.232 each
7513-231	£2.790 each

The proposal is for cartons to the same specification, but in plain brown and with self-adhesive label bearing the company name to be used instead.

Estimates from EPS Ltd have shown that the maximum cost for the new style carton with a 266 mm x 80 mm label on semi-gloss paper (square-edged with permanent adhesive) in any colour would be:

Part no.	Cost	Saving
7513-225	£1.71	£0.128 each
7513-236	£1.97	£0.262 each
7513-231	£2.41	£0.380 each

This would result in an average annual saving of £2,100.

Because the customer usually throws the carton away after taking the Tecreel out, the possibility of using returnable pallets was also considered. However, problems expected with the return of the pallets and the fact that this idea would only be suitable for large order customers, resulted in the idea being dropped.

A7.9 Subcontracting some operations

Machining

The cost of using an outside contractor for the machining operations on the hub and shaft was investigated.

A company called PTG indicated that they have two idle CNC machines and were ready to take on work immediately at the following price:

- Shaft: £2.25 (turning operations only, Tecalemit supply material)

- Hub: £4.25 (turning operations only, PTG keeps fixed stock for schedules orders).

Compared to in-house machining, this will result in a saving of £0.74 on the shaft and £1.37 on the hub, giving an annual saving of £17,724 (assuming no spare labour and machine capacity is created).

A7.9.1 Heat treatment

Currently, the heat treatment of the shaft is carried out by a sister company - Siebe Plating - at a cost of £1.17 each. This is a known loss operation.

The following prices for using outside contractors were obtained:

- Superwich, Tavistock: £0.65 (saving £0.52)
- Industrial Heat Treatment, Manchester: £0.85 (saving £0.32).

This represents an annual saving of between £2,688 and £4,368.

APPENDIX 8

A pareto diagram for the 375 Tecreel TL/TR 38000.

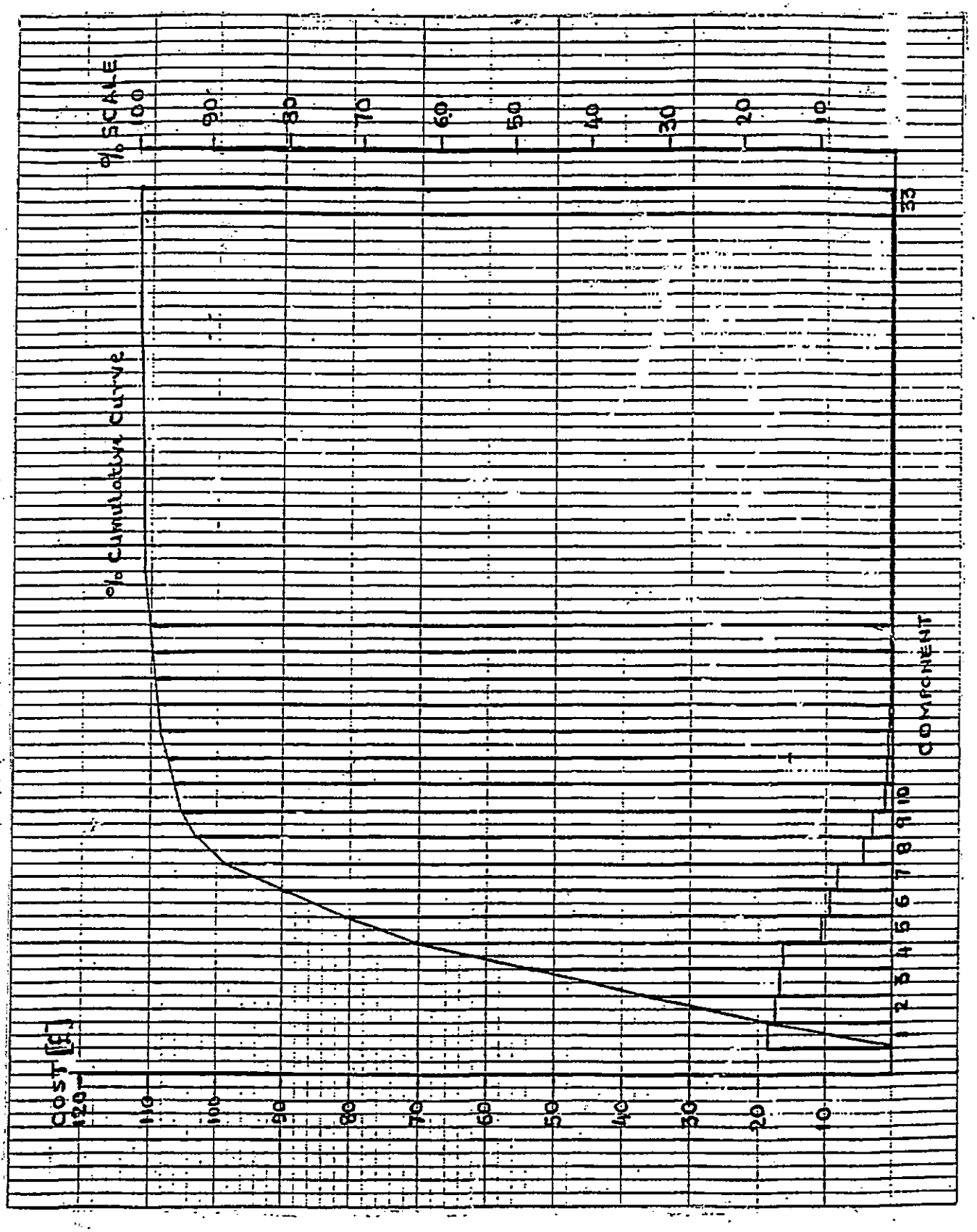

RANK	COMPONENT	MATERIAL COST %	LABOUR COST %	OVERHEAD COST %
1.	HUB	19.5	12.4	68.1
2.	TECREEL ASSEMBLY	-	17.2	82.8
3.	SHAFT	9.0	15.0	76.0
4.	SPRING CASSETTE ASSEMBLY	92.1	1.3	6.6
5.	FLANGE AND STUD ASSEMBLY	29.4	12.1	58.5
6.	MOUNTING BRACKET	9.8	15.5	74.7
7.	HOSEREEL DRUM	41.0	10.1	48.9
8.	SPRING HOUSING	46.2	9.2	44.6
9.	RETAINING PLATE	46.3	9.3	44.4
10.	LOCATION PIN	3.5	16.6	79.9

% contribution of Material, Labour and Overhead Cost components to total cost of most expensive items.

APPENDIX 9

Showing details of the Roller Burnishing operation.

THE BURNISHING PROCESS

ROLLER BURNISHING is a cold-working process which produces a fine surface finish. Hardened and highly polished rolls rotating and bearing on or in an inversely tapered mandrel or cone, apply a steady rolling pressure against the work surface. The result is a small plastic deformation of the surface structure of the prepared-machined surface, which consists of a series of microscopic peaks and valleys. As the rolls rotate under pressure, they cold roll the peaks flowing the metal into the valleys.

The roller-burnishing pressure required depends on the ductility and tensile strength of the material and the surface roughness before burnishing. Any change in size can only occur within the limits of the surface roughness. (peak-to-valley depth).

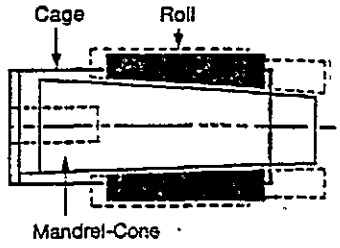

MACHINED SURFACE

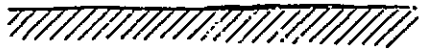

AFTER ROLLER BURNISHING

Burnishing tools impart three major quality characteristics to rough or semi-finished parts . . . simultaneously.

1 ACCURATE SIZE Parts produced from any machinable material can be brought to size FAST with the Burnishing tool. Any standard spindle driven machine . . . single or multi-spindle . . . hand or machine feed . . . automatic or automated may be used. Size control is built into the tool with diameter adjustment in increments of one or two tenths depending on tool size. The precise size can be quickly attained with simple manual adjustment and maintained throughout long production processing operations.

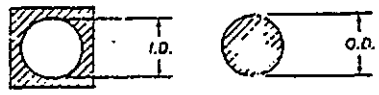

Tolerances
·0005 (·0127mm)

2 LOW MICRO FINISH The Burnishing tool works metal without cutting or abrading the surface. It moves the metal, smoothing and compressing the peaks into the valleys, generating a dense and uniform surface . . . friction free and leaving no residue or feathered edges. Subsequent operations, such as gaging or part run-in are often eliminated. Processing time is SECONDS as compared to minutes for grinding, reaming, honing or lapping operations.

2 to 15 microinch (·05 to ·38 micrometre) finish from an 80 to 120 microinch (2·00 to 3·00 micrometre) prepared surface.

3 HARDER SURFACE During the extremely fast cycle time for part sizing and finishing, the work surface is also being work hardened and strengthened. Surface hardness increases from 5% to 10% with a penetration of ·010" to ·030" (·2540 to ·7620 mm) . . . the low micro finish combined with a hardened and denser surface substantially increases part wear life and corrosion resistance . . . the added strength improves fatigue resistance, decreasing part failures.

5% to 10% increase in hardness—
·010" to ·030" (·254 to ·762mm)
depth of penetration

APPENDIX 10

A FEASIBILITY STUDY INTO PLASTIC DESIGN FOR THE TECREEL

A10.1 Introduction

The basis of the Tecreel design was generally sound, however, a logical solution to an effective cost saving could be changing from metal to plastic. The risk of doing this is a minefield of decisions, however, if successful the Tecreel would be likely to dominate the UK and European market. A possible drawback would be that prototype and final tooling costs for such a project would be too high and it would require a very forward thinking company to venture into the plastic alternative. One of Tecalemit's main competitors for hosereels (Cascade) had ventured into plastic hosereels over 10 years ago but had withdrawn when the plastic failed in service. There are now, however, more advanced materials on the market that may be suitable.

Before any serious investigation into plastic could take place, a specification for the new Tecreel would need to be written, this would be formulated from customer suggestions (after all, it is these people that need to be satisfied at the end of the day!). A questionnaire was distributed through the UK sales engineers to issue amongst Tecreel's customers. The new Tecreel would be called the 'Type 5 Tecreel'. The customer questionnaire comprised five sections and 33 questions, the sections were as follows:

(i) Hoses
(ii) Sealing
(iii) Spring
(iv) General
(v) Competition

The questionnaire and results are shown in Appendix 11.

A10.2 Conceptual 'Type 5' Design

A10.2.1 Type of Moulding

(a) Vacuum
(b) Injection
(c) Rotational.

Approximate prototype tool cost:

Vacuum	- £ 300
Injection	- £3,500
Rotational	- £1,500

Although vacuum moulding appeared the most suitable for an initial production run, as prototype and production tool costs (approx. £900) were very economical, the type of moulding selected would depend on both the chosen material and the design of the hosereel. One major advantage with injection moulding was the option of moulded inserts and the possibility of a single complete mould. Injection moulding unit costs would be lower than other moulding processes, however, break-even costs would be much larger. Vacuum forming is unlikely to be suitable due to its inability to form difficult shapes.

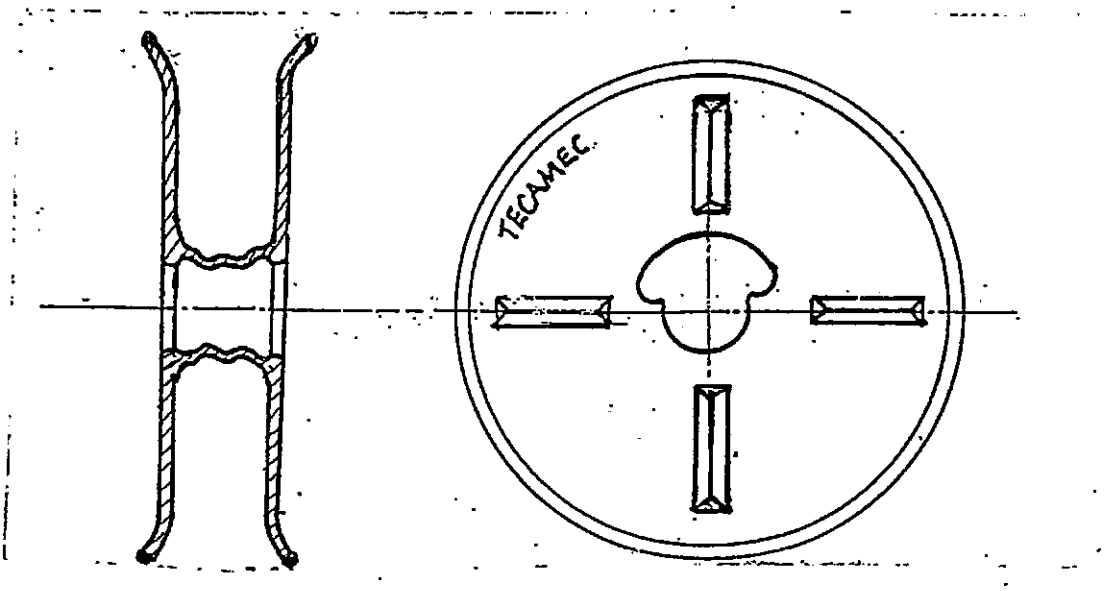

Rotational moulding was rejected due to the difficult shape. Vacuum forming sheet is available up to 10 mm thick, although the Tecreel thickness is likely to be 3 to 4 mm.

Types of Plastic

Various types of plastic were discussed with plastic manufacturers:

(a) Polypropylene
(b) PVC
(c) Impax (derivative of ABS)
(d) Xenoy (polycarbonate/polybutylene terephthalate).

Polypropylene was the least expensive, however, it was doubtful whether it was suitable for low temperature impact (-40°C), it was also likely to degradation when in contact with hydraulic fluid and not suitable for spraying. Xenoy had excellent low temperature impact characteristics, however, it is not supplied in sheet form (for vacuum moulding) and was very expensive.

The most versatile plastic for prototype trials was Impax. It had good low temperature impact properties and was suitable for a variety of surface finishes and also for spraying.

Samples of the above materials were requested for material analysis/proof testing, but as yet not forthcoming.

Two companies who were consulted consider Impax very similar to Xenoy.

Surface Finish

Types of finish available from Plastic Industries:

(i) Smooth/Gloss
(ii) Leather grain
(iii) Pin Cell

Colour

Provided the potential sales for Tecreels were large enough, 'Plastic Industries' would be prepared to hold a stock of coloured material so that alternative colours are possible, however, if a standard colour were to be adopted it would most likely be charcoal grey or black (Lansing Linde's colour).

It is possible to spray Impax in the normal manner, samples of sprayed plastic are required for abrasion, impact resistance and temperature tolerance test. Tecamec's logo can be printed with compatible coloured paint on the Tecreel from a print block, cost £65-£70, this is recommended at prototype stage (first impressions count!).

Red printing on grey background was considered modern and looks highly professional.

Present paint supplier (Manders) suggest our plant is suitable, stoving temperature 35-40°C, with forced drying.

A10.2.2 Flange Design

Two common halves were preferred.

Advantages

(a) Reduced tool cost
(b) Uncomplicated design
(c) Symmetrical design - ease of assembly of halves
(d) Reduction in component types.

The halves would be ultrasonically or solvent welded together, this would be completed in-house or at the suppliers, designs considered should eliminate the need to bolt together.

Moulding to be profiled to accept hose contour on drum entries.

Hose Cut Out

Various cut outs in flange were considered for hose attachment:

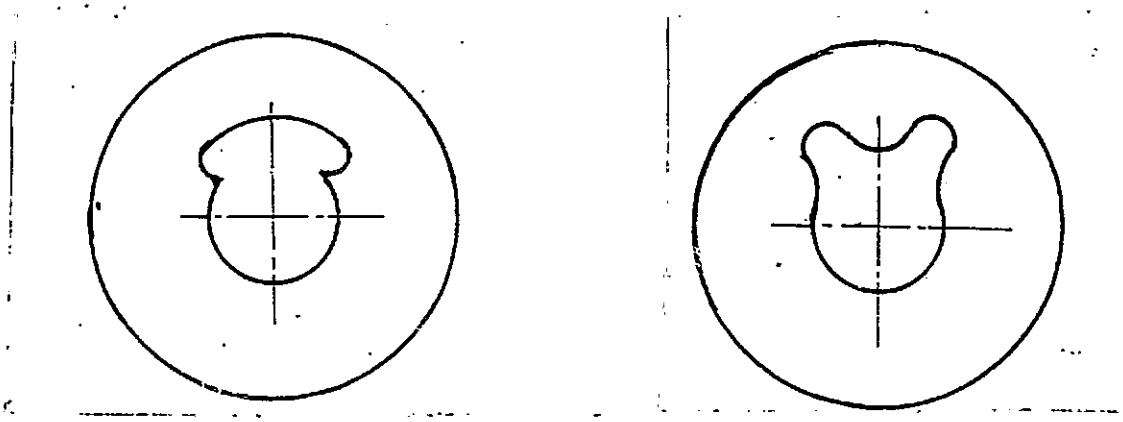

The Kidney shape was preferred as it allowed convenient access for a spanner.

Rim Type

Flange rim types:- the more material used, the stronger, but possibilities were limited by single thickness sheet used in vacuum forming, designs suggested were:

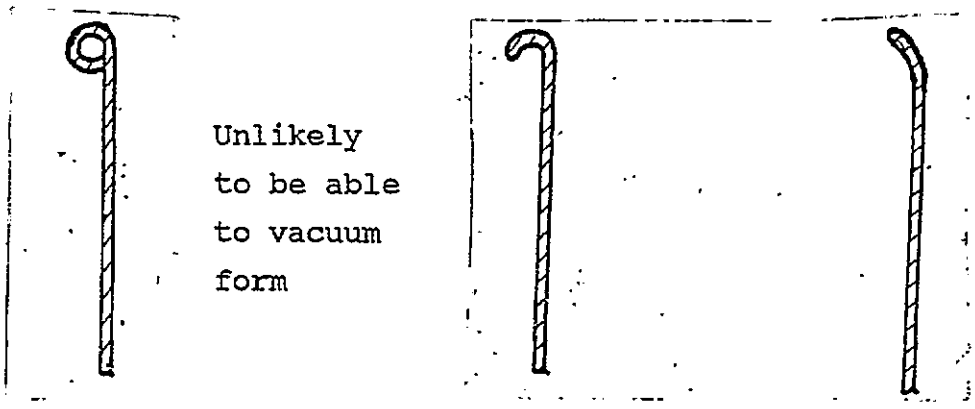

All designs have a lead-in to assist hose entry into reel.

Flange Strengthening Rib

Rib design should act so as to strengthen the flange, but also look well styled in the process.

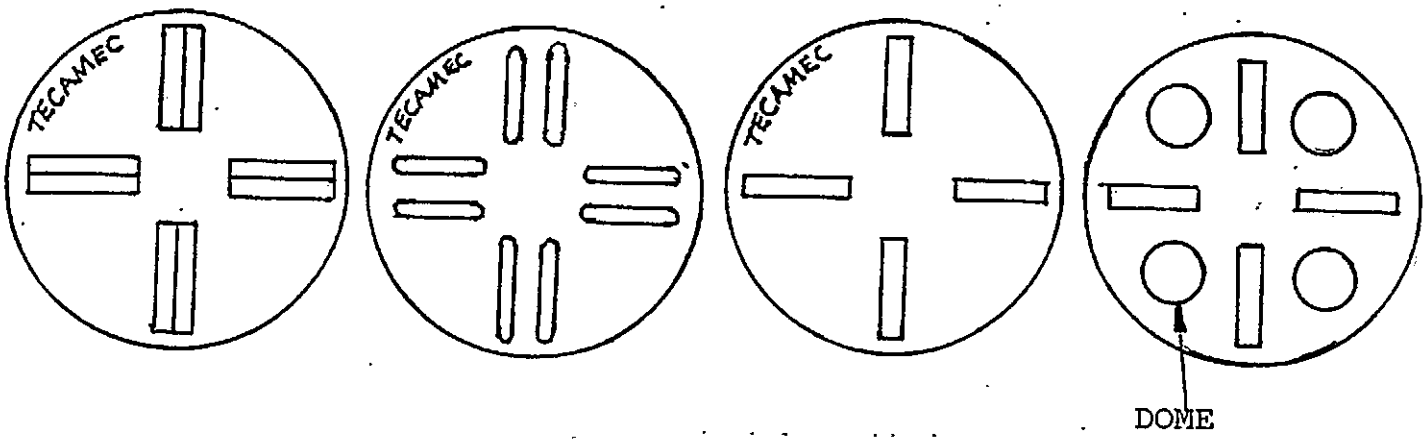

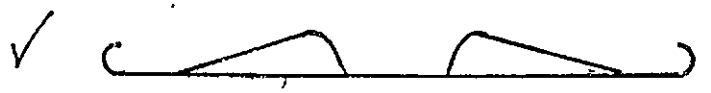

✓ SHARK RIB

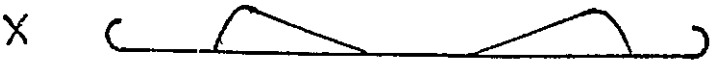

X

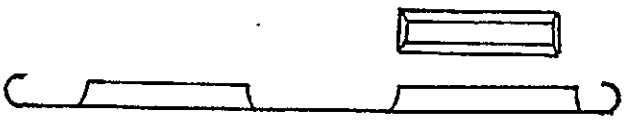

FLAT TOP RIB

DOME

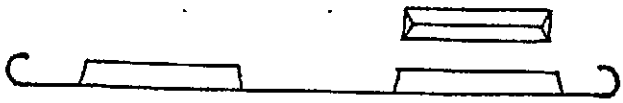

POINTED TOP RIB

If the ribs are to be vacuum formed, they must be shallow, however, two common halves requires that the ribs are on the Spring Can side as well as open side, they therefore can be used to offer support against torque on the Spring Can.

Flange Styling

Various flange styles were discussed, however, ideas were limited due to vacuum form moulding restrictions. An injection moulding design allows considerable scope for intricate design, such as domed flange. Styles discussed were as follows:

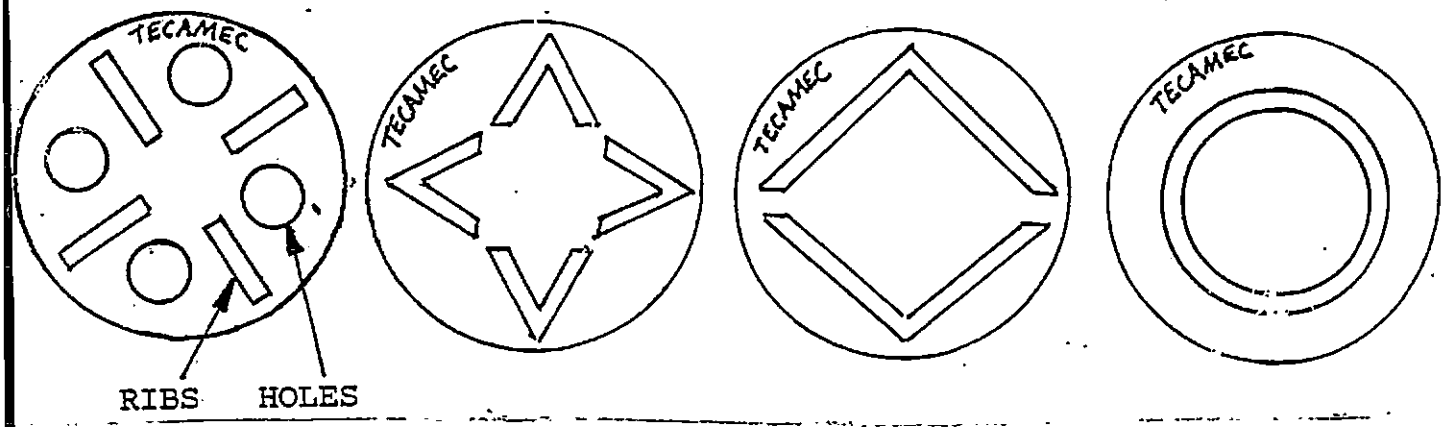

Tecamec's logo would be best printed on the outside far edge of the flange on both sides of the reel, so as to avoid the Spring Can perimeter.

A10.2.3 Spring Can Design

There were several options discussed for this, the line of thinking was again towards two common halves with all the advantages of that of the flange design, plus the bonus that the Can mould becomes both a right and left hand assembly. Main advantages were as follows:

(i) Easy spare parts issue
(ii) Ease of assembly
(iii) Ease of manufacture of LH and RH reel
(iv) Ease of storage of parts
(v) Increased buying power from supplier
(vi) More likely to warrant injection moulding due to the higher volume of parts required.

Clips

It was felt that full use of the flexibility of plastic should be sought and, therefore, clips should be incorporated in the design, with the result that assembly time of the Tecreel should be considerably reduced.

If vacuum form moulding was selected, the clips could be ultrasonically or solvent welded to the flange, an injection moulding process would offer the alternative of possibly moulding the clips as an integral part of the flange.

The conceptual design is shown below:

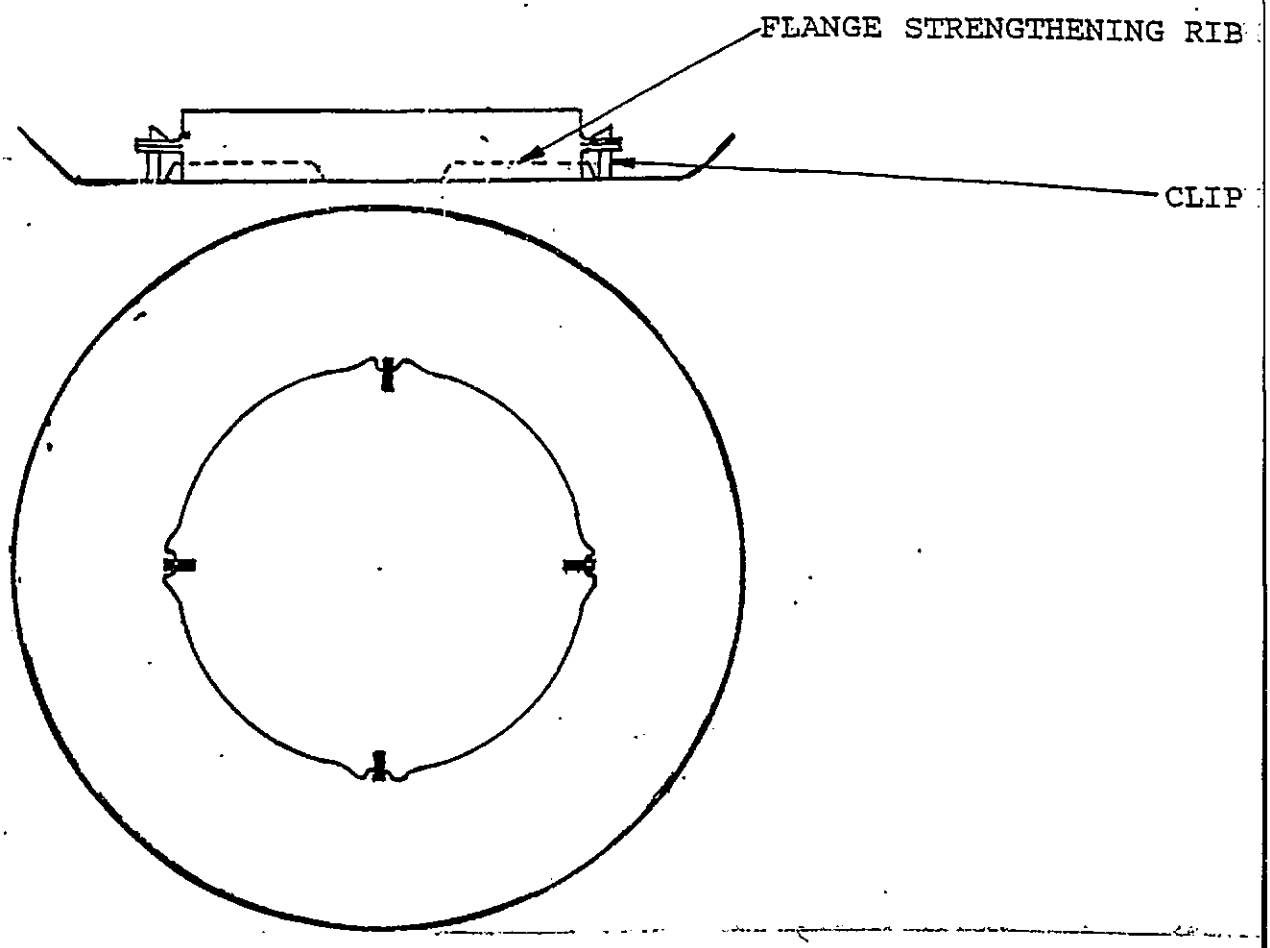

The flange strengthening ribs would act as a location for the spring can so as to reduce the spring torque on the clips. Calculations are required to confirm this.

Spring Can Shape

Apart from the standard cylindrical shape a 'cam' shape was considered, this is a preferred shape due to its ability to hold the spring without requiring a location pin, however, the spring forces would need to be verified. If successful, such a design would reduce assembly time and most probably component cost.

Proposed spring can shape:

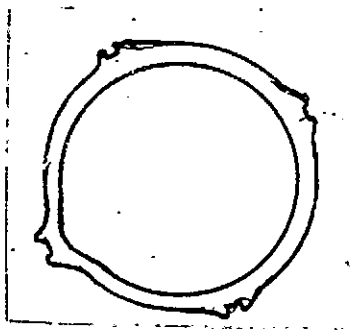

If a cylindrical shape was selected then it would still be worth inserting wedges to save an assembly operation with the location pin, with injection moulding the wedges would be moulded in.

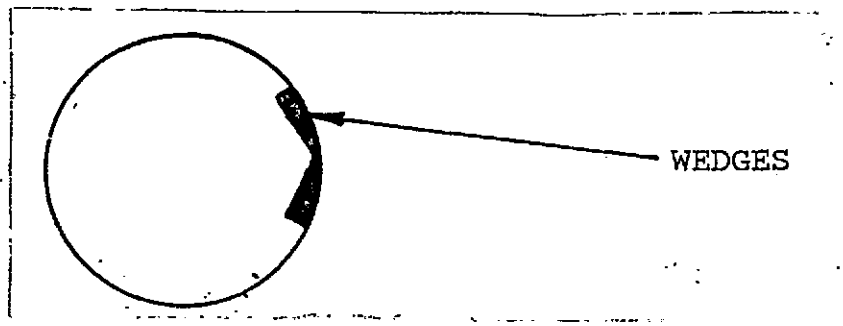

A10.2.4 Hub and Shaft Design

Considerable design work on the hub and shaft design had been investigated before the plastic reel concept and can be considered as a design suitable for both the metal and plastic flange.

The following sketch shows the hub and shaft assembly:

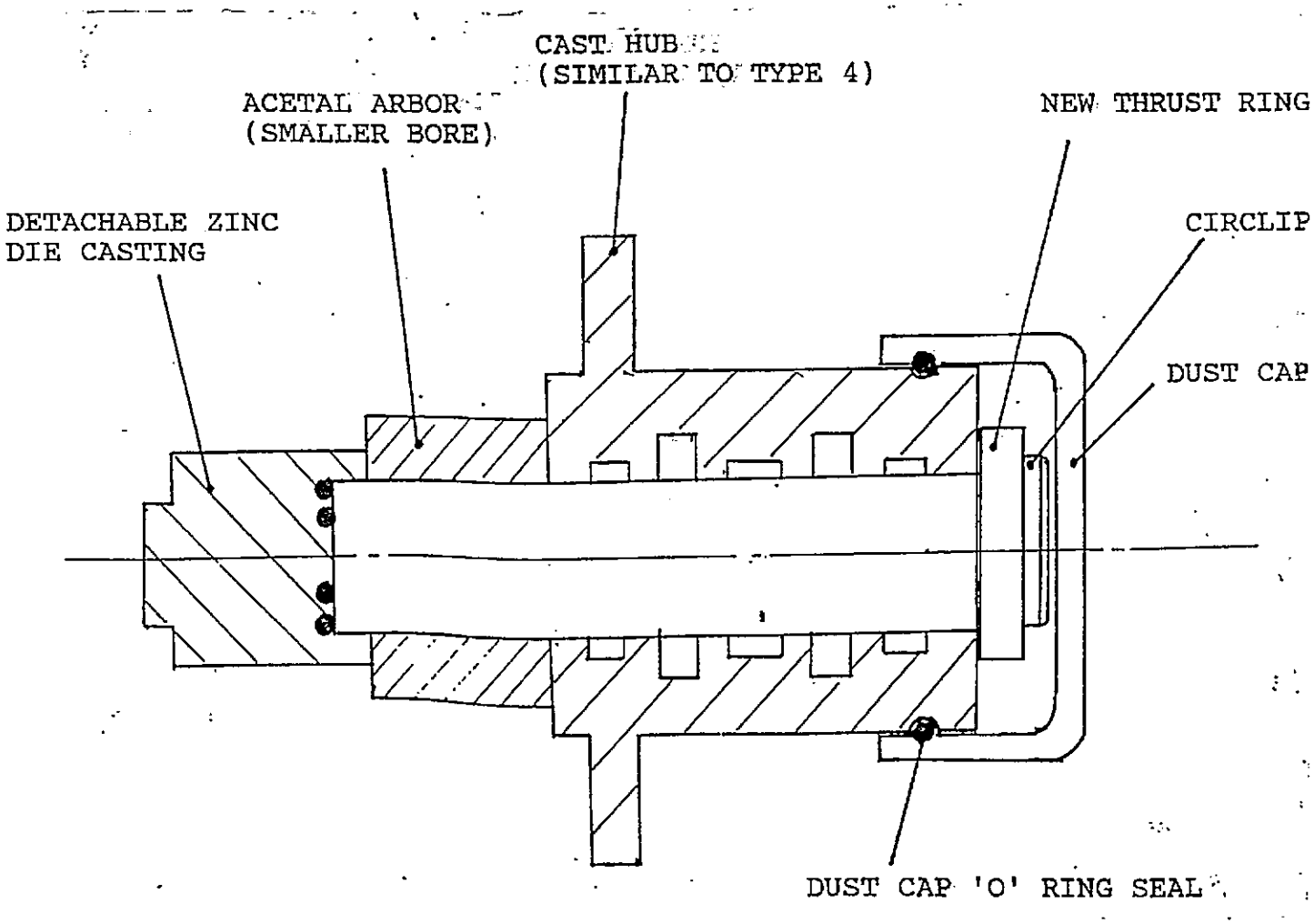

The advantages of the new design are:

(i) Reduced shaft diameter (flow grooves now in hub).

(ii) Reduced flange and casting diameter - compared to 375 Tecreel.

(iii) Universal die cast end (no need to drill tap and plug end as before - lower unit cost) - dependent on customer preference and volume requirement.

The universal end should help standardise shaft variations and cut down machining time.

Hub Shape

The conceptual design for the hub shape was a propeller shape design, allowing the hub to be removed or 'inserted into' the flange by a twisting action:

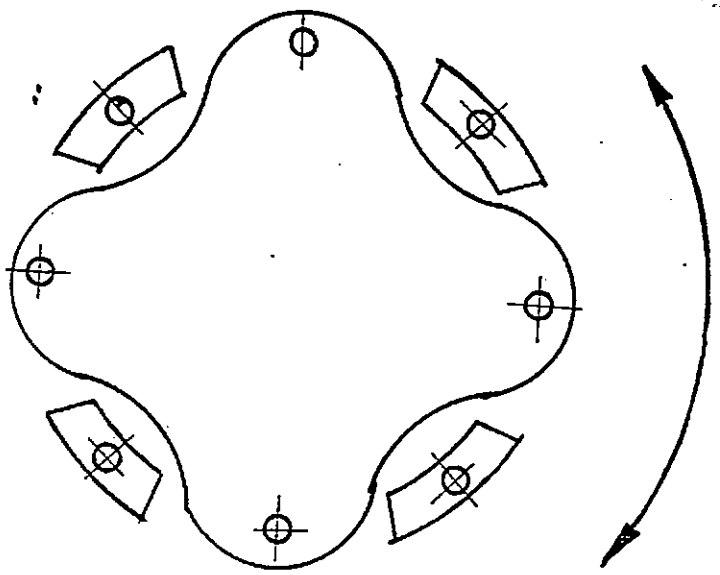

TWIST AND REMOVE

ALTERNATIVE DESIGNS

Flange - Integral Design

An alternative design for the flange was suggested, where the Spring Can becomes part of the flange section.

Conceptual designs are shown below:

a)

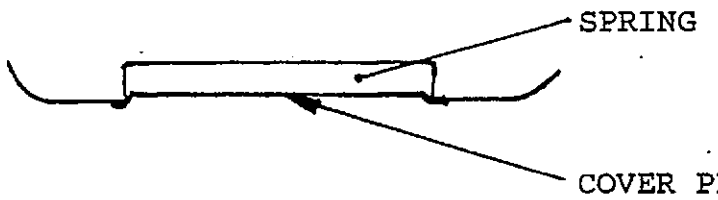

STANDARD SHAPE FLANGE

b)

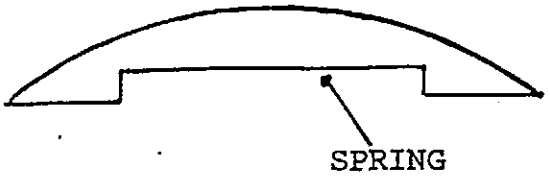

DOME SHAPE FLANGE

Although the design offers an integral shape requiring a minimum of only three parts per Tecreel (i.e. two different flanges and a cover plate), it was not selected for the following reasons:

(i) Does not utilise common half concept.
(ii) Customer reaction to purchasing complete flange when replacing spring.
(iii) Type (b) would require injection moulding.

Horseshoe Centre

This design uses a three-part drum and flange assy, where both flanges are attached to each other with a horseshoe centre; by means of clips or bolts.

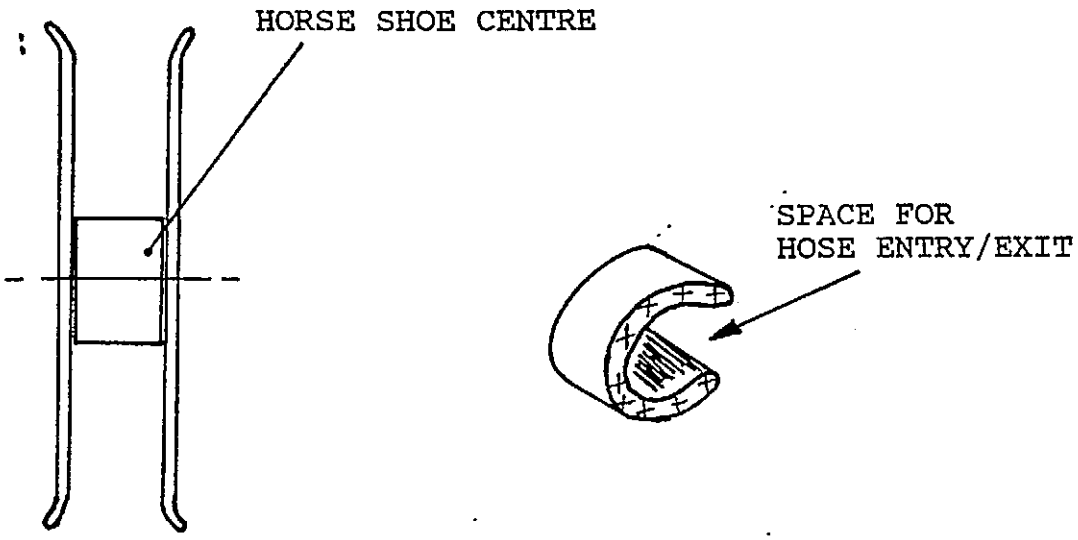

This could be integrated into all the previous flange designs.

Spring Can - Design as present

The initial thoughts on the Spring Can design was to keep the can as present and use a thin plastic form as a spring retaining plate.

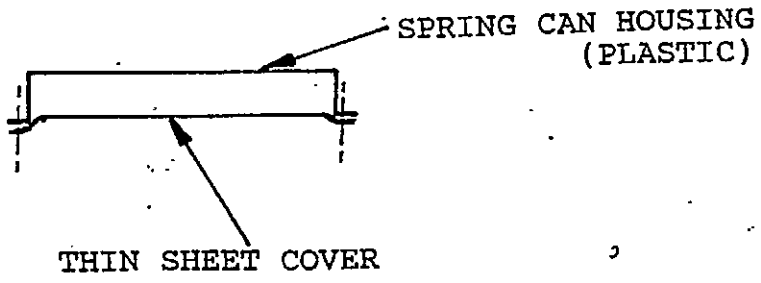

The design does not have the advantages of two common halves and, therefore, cannot double as a LH and RH assembly, however, it does have the advantage of a proven Tecreel design.

Fixing Ring

A final idea for ataching the Spring Can to the flange was the use of an injection moulded ring with metal inserts.

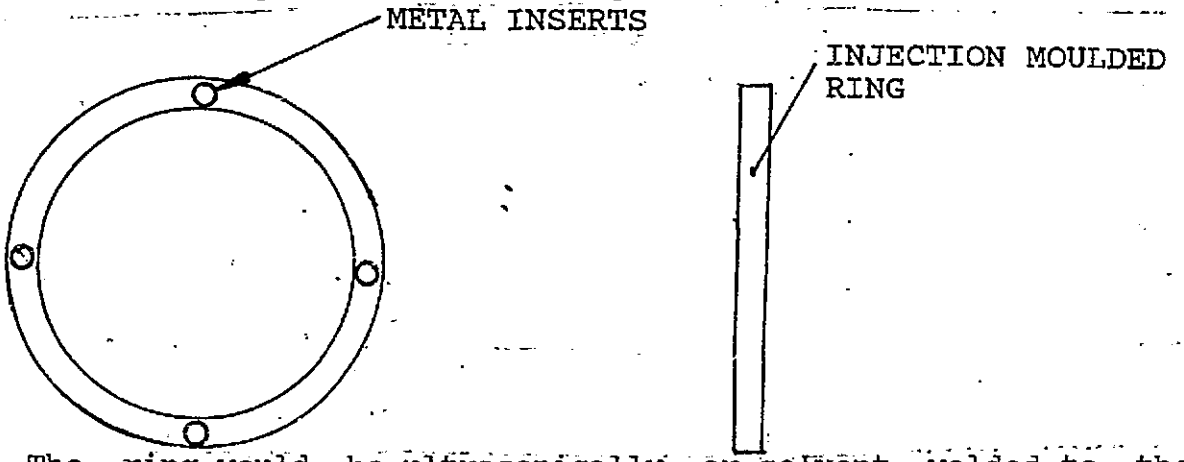

The ring would be ultrasonically or solvent welded to the flange and offers a stronger option than clips, although more costly both in manufacture and assembly.

A10.3 Price Comparison: Metal to Plastic

It would be necessary to offer a lower component cost if plastic moulding was to be accepted in any form on the Tecreel Plastic moulding, suppliers were contacted to obtain a tentative price of moulding the present design in an ABS type plastic, a price comparison is shown as follows:

	Plastic	(Tooling Cost)	Painted Tinware
Spring Can	£2.70	(£9,020)	£3.99
Tecreel Body 318	£4.26	(£15,125)	£5.13
Tecreel Body 375	£4.70	(£16,115)	£5.98
Tecreel Body 457	£6.10	(£18,122)	£9.14

NOTE: An additional tooling cost of £5,060 will be required for a 'spacer'. The spacer will be an integral part of all the Tecreel bodies.

An overall price comparison is shown below:

	Plastic Design	Present Design
318 Tecreel	£6.96	£9.12
375 Tecreel	£7.40	£9.97
457 Tecreel	£8.80	£13.13

The price comparison indicated a higher cost saving on the larger Tecreel and although the tooling costs were high, on average the annual saving would be £28,980, working on this figure the payback for the tooling would be just over two years, there were, however, other options such as moulding the spring can alone, but still keeping the body in a steel material. In this case the break-even would be less than a year.

A10.4 Assessing Conceptual Ideas

Trying to identify the 'best' concept is always a hit-and-miss affair, in generating an ideal plastic design, it is difficult to be certain that the final concept taken into production or implementation could not have been bettered. The proposed stages for the design to manufacture of the Type 5 Tecreel are listed below:

1. Discuss design with suitable consultants and mouldings specialists to decide on suitable design for Type 5 and selection of plastic type (also sample testing).

2. Proposals to be presented to senior management together with detail costing, approval needed for type of consultancy work, together with production techniques for Tecamec.

3. Once costing has been agreed, then follow consultancy up with "back up service" to provide technical information needed to complete designs. Sales involvement needed at this stage. Tecreel sales engineers to be briefed.

4. Consultation of design with suitable moulding specialist with the view to manufacturing a prototype "soft mould" and Type 5 Tecreel.

5. Design of prototype moulding tools.

6. Tooling requirements for hub, shaft and hose fittings.

7. Manufacture of prototype Tecreels.

8. Customer reaction to new reel (Hiab and Lansing mainly).

9. Field trials of Type 5 reel, customer reaction, potential position in market place.

10. Internal consultation on field trial results, small design alterations where necessary.

11. Design of final mould.

12. Manufacture of mould.

13. Preparation in Tecamec for poduction of Type 5 Tecreel.

14. Advertising campaign for launch of new Type 5 Tecreel.

15. Manufacture of Type 5.

16. Launch of Type 5 into market place.

Plastic design is a highly specialised field and requires expert designers/consultants to produce an optimised design for the product, major considerations need to be taken into account, such as:

(i) strength characteristics (possible use of finite element design).
(ii) minimal material usage.
(iii) suitability for moulding.
(iv) aesthetics.

Consultants were contacted for advice on plastic moulding and design, however, an average charge of £240 per day is not uncommon, this requires a fairly heavy financial commitment at a relatively early stage in product development. Figure A10.1 shows a curve of cost in the various stages of design, identified by Buggie in 1961 and a similar curve is shown in BS7000 Guide to Managing Product Design.

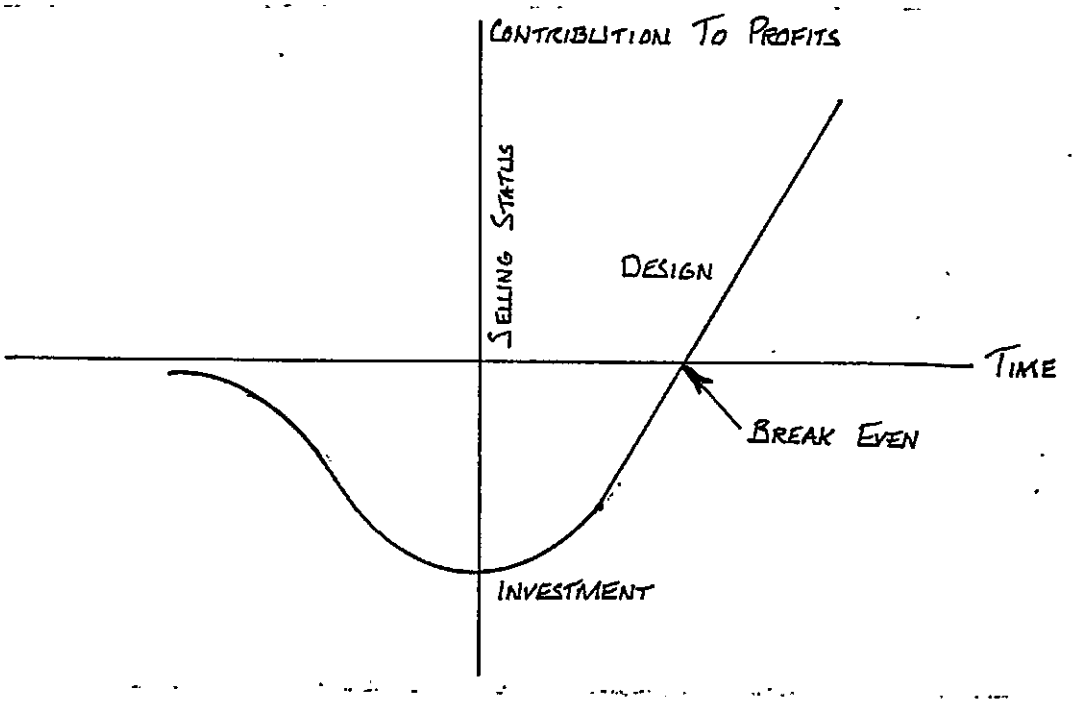

Figure A10.1 The effect of investing in design.

One way of representing the cost of new product design[89] is shown in Figure A10.2.

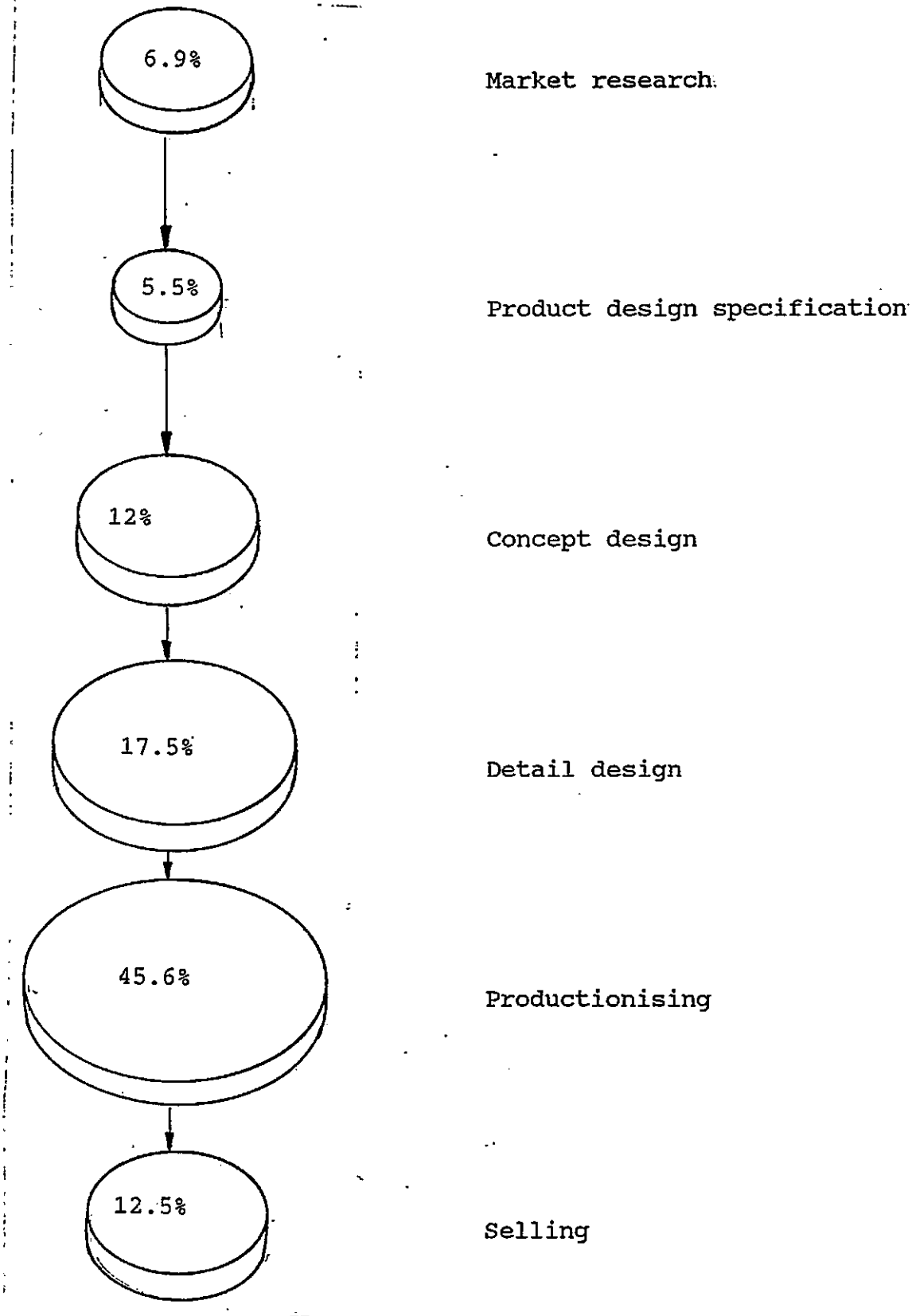

Figure A10.2 The cost of new product design[29].

An effective selection procedure in the design would be as follows:-

(i) Identify safety requirements.
(ii) Eliminate concepts that do not meet company strategy.
(iii) Grade remaining concepts against each other for various important (market) requirements.
(iv) Identify best features and combine into overall 'best' concept.
(v) Ensure the final concept conforms to the requirements of the specification.

when all the requirements have been listed, a weighting operation is needed to assess the optimum concept, this is best achieved with the use of a concept assessment matrix[29].

This would be split into three areas:-

(i) Safety
(ii) Strategy
  (a) Management Guidelines
  (b) Production
  (c) Distribution
  (d) Financial
  (e) Technology.

(iii) Market
  (a) Maintainability
  (b) Price
  (c) Aesthetics
  (d) Reliability
  (e) Ergonomics.

Certainly a decision to enter plastic design requires top down commitment. In Tecamec's case (company name before merger), there was considerable uneasiness on investing large sums of money in product design. There was, therefore, a delay in making a decision on this spending, during this delay Tecamec's management was changed and this resulted in further investigations being brought to a standstill.

APPENDIX 11

A11.1 TYPE 5 TECREEL QUESTIONNAIRE

Hoses

1. What is the preferred hose bore?

A. $^1/_4$, $^5/_{16}$, $^3/_8$, $^1/_2$. ($^5/_8$ possibly for Boss trucks)

2. If $^1/_2$" hose bore was dropped from the range, would this cause any problems/

A. Yes, but only in a few instances (only ten sold this year).

3. There appears to be a preference for greater hose lengths pull-offs, but reducing the hosereel flange diameter to the minimum. Are customers aware that a greater number of working spring turns would be used, thus reducing the spring life?

A. Not concerned, i.e. require long pull-off and spring life.

4. Any new hosereel would be fitted with thermoplastic Siamese hose. Any problem?

A. No.

5. What are the typical hose pull-off lengths required for hosereels?

A. Many variations used.

6. Hose end fittings for connection to hub. There are various types presently available, being:- straight banjo; banjo elbows; straight females; 90° standpipe with steel cone; standpipe with steel cone; standpipes with male bushing (type 4) 90° female elbows (375). Banjos offer the potential for the smallest diameter drum, but are notorious for flow restriction. Does customer have any preference?

A. No, but flow important on larger hose sizes, i.e. attachment time response.

7. To determine the largest flange size required, what is the largest bore hose and longest hose pull-off length required? Largest known to-date is 7.0 metres pull-off, $^{3}/_{8}$" bore hoses. Actual hose length 7.5 metres.

A. 7.0 metre maximum covers all the customers contacted, but mast height and lift increasing, i.e. 12 metres lift.

Sealing

8. What is the maximum known working pressure that hosereel may have to operate?

A. 300 bar would seem to cover most applications. (Customers don't really know).

9. Would both hose circuits be under pressure at any one time?

A. Only in the Hiab customer situaion.

10. Does customer have any present problem with seal life?

A. None reported.

11. Does customer presently experience wear on hubs or shafts?

A. None reported.

12. The intended shaft diameter is 35 mm. This is less than the 375 Tecreel, but the same size as the Type 4 Tecreel. Any reaction?

A. Customers not concerned as long as reels perform as 375 Tecreel.

13. It is intended on the new Tecreel that adaptor sealing (shaft inlet port and hub) will be sealed with 'O' rings, not Dowty seals or taper threads. Advise customer reaction?

A. O.E.M.s purchase reels without adaptors. If the above adopted, we would provide reels complete with adaptors and inform customers. (Inlet adaptors are not normally supplied).

Spring

14. Which of your customers currently have problems with spring life and what is the application?

A. Highlift, cold storage, high usage.

15. To obtain a vast improvement in spring life, it is likely that both the spring width and weight will increase by 3.564 Kg. What is the customer preference, either the narrowest hosereel possible, or greatly improved hosereel life?

A. Customers require narrow reel and good spring life.

16. On the new Tecreel, it is intended that the spring will be completely enclosed within a container, and will be universal right/left hand. Spares are likely to be more expensive. Bearing in mind the spring life will be improved, what is the customer reaction to this?

A. O.E.M.s purchase reels as either left or right hand, they do not re-hand reels. Distributors would prefer interchangeability.

17. In an effort to obtain more spring life, the ratchet facility on the spring arbor may be lost. Damage to the spring would result if the spring was rotated incorrectly. State customer reaction. How many end users use the arbor ratchet facility on the 375 Tecreel?

A. As incorrect assembly can occur, they prefer the arbor as at present. (Some customers do not mind).

General

18. Do customers experience a lot of problems with damaged Tecreels, both during delivery and in use?

A. With new boxes, delivery damage has been reduced to an acceptable level.

19. What do customers like and dislike about our Tecreels?

A. Good quality, robust, poor paint finish, not interchangeable with competition, poor paint finish.

20. Consider asituation that all present sheet metal work (spring container, drum and flanges) could be produced in plastic. What is the customer reaction?

A. O.E.M. prefer steel, i.e. if bent can be re-straightened, also they can overspray with their house colour, weight of reel not over-important, plastic would overcome rusting. (The main idea behind the plastic hosereel is not to save weight).

21. Tecreel colour. We currently produce tinware in three colours - post office red, black and nato olive green. Does the customer have any colour preferences? The use of plastic parts may eliminate the colour option.

A. Lansing - charcoal grey, Hiab - black, JCB sometimes spray yellow, also nato green.

22. Bearing or bearing strips within a hub and shaft assembly may enhance the hosereel operation. The Tecreel would become wider and the cost would increase - customer reaction.

A. We need to reduce cost of reel, customer looking for cost savings.

23. Do customers see any reduction in hydraulic hosereel usage in the next five years, or increased usage? If so, why?

A. Lansing Henley, JCB, Boss, Sanderson, Kalmar see an increase as more attachments used. Lansing Bagnal see a possible decrease, i.e. hoses over pulleys. (Triplex masts have been notoriously bad with pulleys).

24. The shaft inlet ports and hub thread ports are likely to be $G^{3}/_{8}$". Does this cause any problems?

A. No, but customers will need to be informed.

25. Regarding oil flow through hosereels, do customers experience problems? Are they concerned about pressure drop?

A. No real concern, except that flow - attachment response time.

26. What is the customer reaction to a detachable shaft inlet port block, which would be bolted to the primary shaft? (i.e. the 375 shaft as it is presently supplied, but in two pieces).

A. O.E.M.s take reels complete.

27. Mounting brackets - types presently available are flat (375); welded right angle (type 4); flat/right angle, universal type (Aeromotive); detachable right angle; (Deutsche Tecalemit, Bolzoni); rectangular block (Cascade). Which is preferred?

A. Current customers would prefer mounting, as they presently use, but interchangeability with others will assist sales.

28. The intention is to evaluate a zinc die cast hub; mounting bracket and shaft inlet block. Has customer had any previous experiences of zinc die castings in hydraulics and construction use?

A. No comment passed, as each application is different, but wear could be a problem.

29. The anticipated range for the hosereel to operate is -40°C to +80°C. Is there any likelihood that this may change?

A. No.

30. Is corrosion a problem on hosereels in general?

A. Yes, trucks used outside in all weathers the reels started to rust very quickly.

31. What is the minimum flange diameter of hosereel that may be required? 280 mm diameter appears to be the smallest available at present.

A. A minimum of 280 mm diameter would cover all those questions.

Competition

32. Of the known competition hosereels, state the good points.

33. Of the known competition hosereels, state the bad points.

Answers to 32 and 33 below.

Cascade

Good	Bad
Slimline	Expensive
Good pull-off	Availability
Quality	
Small Hub	

Aeromotive

Good	Bad
Cheap	Quality
Availability	

Bolzoni

Good	Bad
Flanges easily	Quality
Changed to different sizes	
Good pull-off	
Lengths	
Cheap	

A11.2 SPECIFICATION FOR TYPE 5 TECREEL

1. Max. flange diameter to be suitable to achieve 7.0 metres pull-off of $^{3}/_{8}$" bore hose. Actual hose assembly length 7.5 metres approx. 430 mm estimated flange diameter.

2. Min. flange diameter to be 280 mm. (The three likely diameters would be 300, 375 & 475 mm).

3. Winding drum diameter to be as small as possible. 130 mm diameter estimated.

4. Reel suitable for use with $^{1}/_{4}$", $^{5}/_{16}$" and $^{3}/_{8}$" bore hoses only.

5. Working pressure of Tecreel 300 bar.

6. Spring life. Notional figure of 100,000 cycles. 1 cycle currently extending and retracting 6.5 metres $^{3}/_{8}$" hose on Tecamec test rig. Overall goal is two years' life in high lift environment.

7. Spring torque. Capable of retracting 7.0 metres $^{3}/_{8}$" bore hose when under pressure.

   Mast descent when laden 0.6 metres per second.
   Mast descent when unladen 0.4 metres per second.

8. Spring container outer diameter to be reduced by 10% (on smaller flange size only). The spring should be encased in two moulded plastic halves. The spring assembly will be universal right/left hand mounting.

9. The two outer side plates should be common. The hose winding drum to be as small in diameter as possible, being made of moulded plastic. Each edge cut-out to be radially relieved to accommodate semi-circular hose contour. Side plates should first be evaluated in plastic, with reinforcing ribs.

10. Whilst evaluation of alternative materials is carried out, the principal hub and shaft initial trial should be of proven combination, that is, a cast iron hub and hardened/ground steel shaft. Diameter to be nominally 35 mm, nominal bore of flow through Tecreel to be 10.0 mm.

11. Spring - reduce friction on sides of spring.

12. Sealing ring grooves and oil groves within hub. Whilst anti-friction strips or bearings within the hub may reduce the spring torque required, a certain minimal torque is required to keep the hose tensioned when extended. A comparable compression will have to occur on the sealing rings, so it is expected that anti-friction devices would play no significant role within the hosereel. The hub and shaft would also have to be increased in width to accommodate any anti-friction device.

13. Seal life - life to be comparable with that of spring.

14. Centralise hose run with mid hub connection point.

15. Operating temperature range -40°C to +50°C maximum.

16. Fixing of adaptors to hub and shaft. Do not use taper threads, Loctite or bonded washers. Preference for 'O' rings where possible.

17. Dust and water cap to hub - plastic cap prone to damage. Use either zinc die cast or metal plate cap with 'O' ring seal.

18. Hose and fittings for hub connections. Customer request for both fittings to be readily accessible. (Not necessarily required).

19. Tecreel width to be as slim as possible.

20. Tecreel colour - advent of mouldings could be colour restrictive. (Possible to paint plastics).

21. Shaft inlet ports/Tecreel mounting - detachable shaft inlet blocks.

    (a) $G^3/_8$" side inlet ports (as 375 Tecreel) with rectangular mounting bracket. The actual inlet port block machined with 2 off M10 tapped holes, not 4 off M8 (for bracket fastening).

    (b) Rectangular shaft inlet block, as per Cascade.

    (c) Right angle bracket, with $G^3/_8$" shaft inlet ports machined into rear of bracket.

APPENDIX 12

Submission of three publications for presentation.

Seventh National Conference on Production Research, 3-5 September 1991, Hatfield Polytechnic.
"A Study into Manufacturing Effectiveness using a Just-in-Time approach."

Sixth International Conference of Operations Management Association, 25-26 June 1991, Aston University.
"Improving Manufacturing Performance through the application of Just-in-Time techniques."

European Simulation Multi-Conference, 17-19 June 1991, Copenhagen.
"A simulation study into manufacturing effectiveness using a Just-in-Time approach."

A Study into Manufacturing Effectiveness Using a Just-In-Time Approach

R J Richmond*, R S Burns and J F Pearce**

Department of Mechanical Engineering, Plymouth Polytechnic South West, Drake Circus, PLYMOUTH, Devon, PL4 8AA, *Dept of Mech Eng/Tecalemit Systems Ltd, Plymouth Polytechnic South West, Drake Circus, PLYMOUTH, Devon, PL4 8AA and **Plymouth Business School, Plymouth Polytechnic South West, Drake Circus, PLYMOUTH, Devon, PL4 8AA

ABSTRACT

This paper investigates manufacturing effectiveness when applying a Just-in-Time (JIT) approach to production processes. The company's manufacturing so far has grouped machine tools by function, i.e. turning, milling and grinding. When considering medium and large batch production this produces unacceptable material flow, however by using a "Group Technology Cell" where machines are arranged so that a products associated operations are grouped together in a cohesive manufacturing unit this can decimate work in progress levels, reduce lead times and make the operation much more responsive to customer demands.

The paper utilises knowledge of the operational efficiencies for the original manufacturing layout and compares these to the present layout. Although production levels are only small volume, the investigation shows that using JIT techniques the result can be reduced lead times, improved quality, reduced inventory, reduced man hours per product and general increased customer satisfaction.

1. INTRODUCTION

This paper concentrates on the programme of work carried out to implement the 'Tecreel cell' on a sponsored two year scheme by a Teaching Company Associate, and studies the performance levels before and after cell formation.

As part of the JIT methodology, a Total Quality Management (TQM) programme was also implemented with the use of Statistical Process Control (SPC) techniques and operator involvement in quality awareness procedures.

The overall approach or philosophy of JIT is the elimination of waste, a suitable definition of waste [1] is given by:-

Waste = "... anything other than the minimum amount of equipment, materials, parts, space and workers' time which are absolutely essential" (to add value to the product)

This means using the minimum amount of resource in the most efficient way to make

production. It is quite common to find that during the life of a product, 5% of its time it is undergoing a value-added process, whilst 95% of its time is picking up costs. The approach is to concentrate on the 95% waste. [2]

The JIT approach to productivity is shown in Figure 1.

To eliminate waste, focus on:-
i) Total quality control
ii) Total waste elimination
iii) Enforce problem solving
iv) Total involvement

Figure 1
JIT Approach to Productivity

The Traditional approach to productivity is illustrated in Figure 2.

Traditional approach, focus on:-
i) Methods improvement
ii) Work study
iii) Automation

Figure 2
Traditional Approach to Productivity

2. THE "TECREEL"

Tecreels are primarily hydraulic hosereels used for the transfer of fluid power up to nine metres. The Tecreel is attached to cranes and trucks and more commonly forklift trucks to power the functions of the vehicle such as side shift and tilt mechanisms. (An exploded sketch is shown by Figure 3) Figure 4 shows the alternative flowline layout.

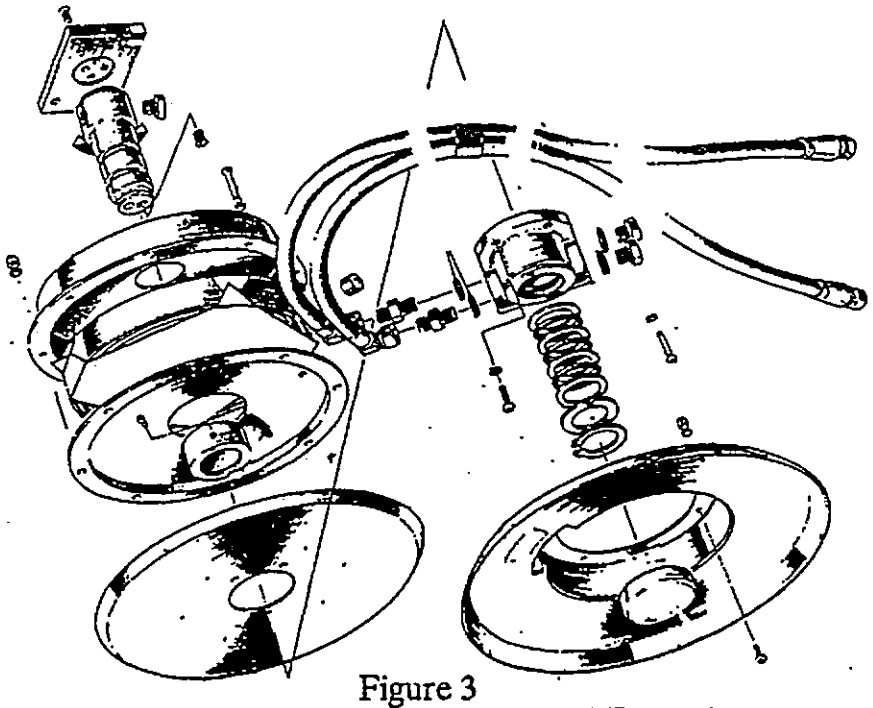

Figure 3
An Exploded Drawing of the 375 Tecreel

Figure 4
Alternative Flowline Layout of Section

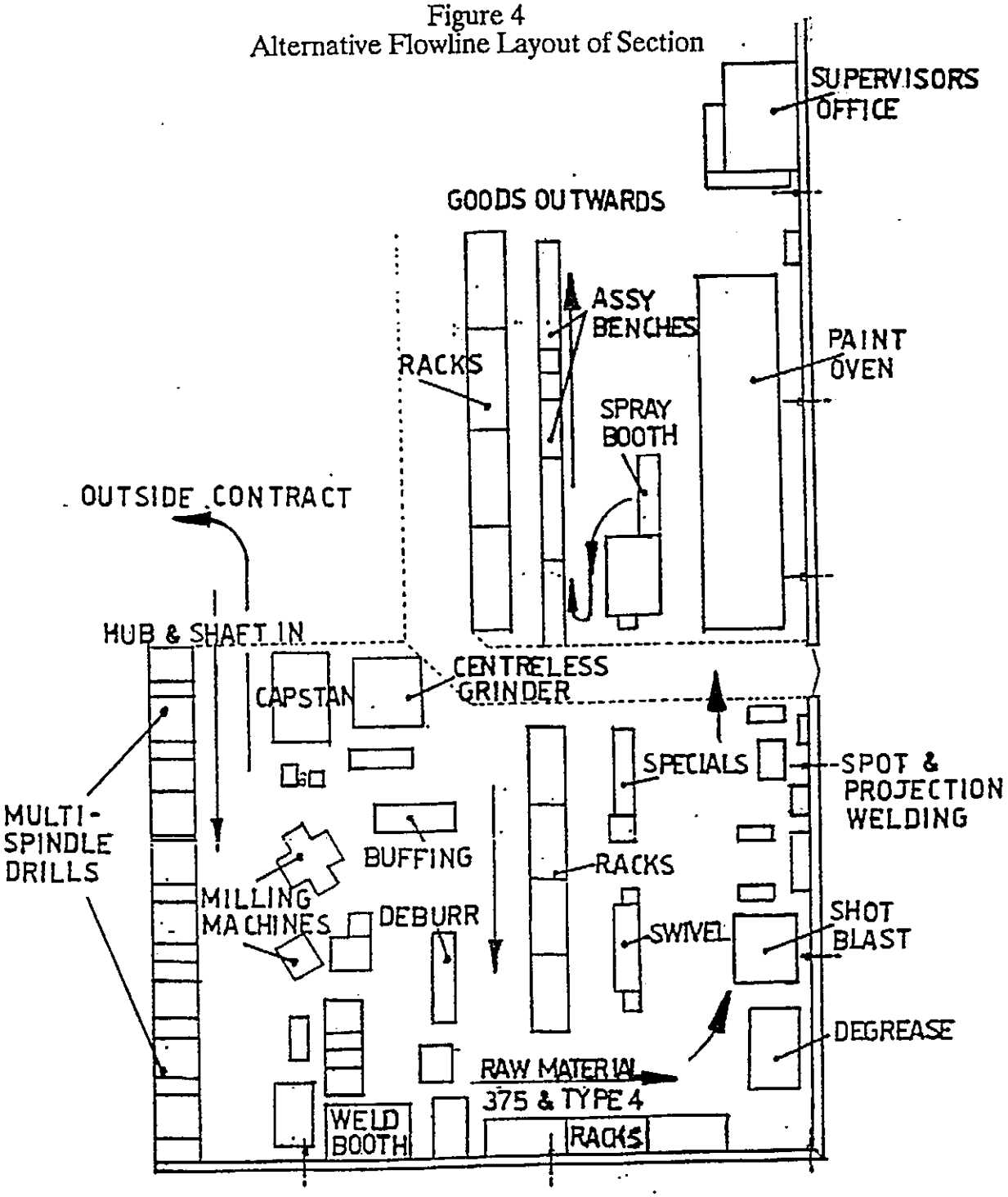

There are four basic types of Tecreel and the flowline was based around the most popular type, the 375, the average monthly breakdown of Tecreel build was as follows:-

	375	Type 4	4 Port	Multifunction
Average Monthly Build	750	150	20	10

The flowline basically used an anti clockwise flow of work so that raw tinware entered the cell at one end and exited the cell at the other after proceeding through

the following operations degrease and shotblast, spot and projection welding, spraying, hub and shaft assembly and test, tinware assembly, spring build, spring assembly, hosing up, boxing up. The only change to the flowline was swivels and the small quantity specials (4 port and multifunction reels). Each of the assembly bench operations were timed so that all operations were approximately of equal length, and when a different type of reel was being produced the operations would change to keep timings approximately equal.

2.1 Group Technology Layouts

The key objective when considering this essential foundation stone in the JIT philosophy is to determine what operations need to be together to produce a complete product or sub-assembly, then by grouping the operations by product family the shortest route of manufacture will be achieved. This layout will also form the foundation, for automation if required. The present design of the Tecreel does not lend itself to automation due to the complicated assembly of the product, however a gravity conveyor as part of the assembly bench process would assist the production process.

3. KANBAN

This pull scheduling technique is a single and effective way of planning shop floor activities. Kanban (Japanese for visual signal, usually a card) prevents unnecessary work in progress and stock by the use of a simple stocking system. Parts are supplied to the Kanban point to replenish stock, if no stock is used the supplier stops production. A Kanban may not necessarily be a card, a verbal command (over an intercom, telephone or shout...), a flag, a light or a hand signal could very well constitute a Kanban. In one case, coloured golf balls sent through by pipe were utilised to authorise production and movement of materials [3]

The Tecreel department uses a two card system, more commonly known as a dual-card system. This system utilises two cards one red and one blue, each attached to a container or in some cases the same container lent with a partition between red and blue stock. The blue card quantity represents approximately one months stock holding (Calculated from three years of sales figures), the red card represents the lead time to manufacture the product plus a 20% contingency. An A,B,C, priority rating system is also used with cards to control the stocking of expensive items, class 'A' items have the highest cost and usage and should therefore be kept to a minimum (in some cases only two weeks stock) class 'C' items have the lowest usage and cost and therefore need less vigilance.

3.1 Total Quality Control (TQC)

This is the fundamental bedrock of JIT, the elimination of waste results in an increased need for improved quality in design, supply and processing. With high levels of work in progress and stock, companies are often unaware they even have a problem, quality when measured as a percentage of factory costs is quite often as high as 20 to 30%. [2]

TQC requires internal manufacturing quality control (QC) changes, from separated lot inspection process to process controlled quality (PCQ).
PCQ integrates QC by individual inspection or application during the process of the product, prior to being returned to WIP inventory [4]. The need is to move away from the traditional quality inspectors and complex procedures and systems, these

approaches do not add value to the product.

One method of controlling quality in the Tecreel area was the use of SPC, this was introduced into the nut and stud projection welding area, this resulted in reduced failures during the tinware assembly process. Another area of QC improvement was the introduction of torque wrenches throughout the assembly process, all nuts and bolts were torqued using torque handles and air wrenches. The handles and wrenches were calibrated on a weekly basis and the operators were responsible for all data logging and calibration.

Following the JIT methodology of a 'cross trained' work force i.e. operators ability to interchange jobs, Job Information Sheets (JIS) and test specifications were written for the area and distributed over the benches concerned, the benefit of this was to enforce that procedures were followed no matter which operator took over the process.

4. CELL REVIEW

For the purposes of assessing the operational efficiencies before and after the implementation of the 'Tecreel Cell', review data on stock levels, production levels, man hours and lead time needed to be collected.

Cell review data indicated a stock level reduction of 30% and a lead time reduction of 33%.The data collection method has been kept as similar as possible for previous and present review.

5. CONCLUSION

The cell review data showed considerable improvements since the introduction of the Tecreel cell, stock levels (-30%) lead time (-33%) showed dramatic improvements, stock level reduction alone produced a saving of £50k and the lead time reduction resulted in increased customer satisfaction. The large arrears in orders were virtually eliminated six weeks after implementation, one of the additional benefits of this resulted in returned faulty reels being repaired far more efficiently than before, as many of them had not been attended to because of the backlog in orders. Overall the cell approach has paced a step in the right direction, it would also be expected that many of the benefits of the programme such as increased customer demand will not be realized until well after the scheme's completion.

REFERENCES

[1] Spring/Summer 1988 issue of Target with permission of the Association for Manufacturing Excellence, Inc., (AME), 380 West Palatine Road, Wheeling 60090, USA; 312/520 - 3282

[2] Just-in-Time, Raymond H. Jewitt, DTI Managing into the 90's, 1990.

[3] Schronberger, Richard J, Japanese Manufacturing Techniques, The Free Press, NY (1982) pp. 96-97.

[4] Smith, S.R., "MRP II and JIT : Evolution of a Competitor" P and I M Review with APOCS News, Vol 5., No.8 (August, 1985) pp. 52-58.

RJR

IMPROVING MANUFACTURING PERFORMANCE THROUGH THE APPLICATION OF JUST-IN-TIME TECHNIQUES

Robin Richmond, Tecalemit Systems Ltd., UK
Roland Burns, Polytechnic South West, UK
and
Jim Pearce, Polytechnic South West, UK

INTRODUCTION

This abstract summarises manufacturing effectiveness when applying a Just-in-Time (JIT) approach to production processes. By grouping a number of different machines and operations associated with a product or product range in a cohesive manufacturing unit referred to as a "Group Technology Cell", the material flow can be impressively improved.

The abstract concentrates on the programme of work carried out to implement the 'Tecreel Cell' on a sponsored two year scheme by a Teaching Company Associate and studies the performance levels before and after all formation.

THE 'TECREEL'

Tecreels are primarily hydraulic hosereels used for the transfer of fluid power up to nine metres. These are attached to cranes and trucks and more commonly forklift trucks to power the function of the vehicle such as side shift and tilt mechanisms. There are four basic types of Tecreel and the flowline was based around the most popular type the 375, the flowline basically used an anti-clockwise flow of work so that raw tinware entered the cell at one end and exited the cell at the other after proceeding through the following operations, degrease and shotblast, spot and projection welding, spraying, hub and shaft assembly and test, tinware assembly, spring build, spring assembly, hosing up, boxing up.

GROUP TECHNOLOGY LAYOUTS

The key objective when considering these in the JIT philosophy is to determine what operations need to be together to produce a complete product or sub-assembly, then by grouping the operations by product family the shortest route of manufacture will be achieved.

KANBAN

This pull scheduling technique is a simple and effective way of planning shop floor activities. Kanban (Japanese for visual signal, usually a card) prevents unnecessary work in progress (WIP) and stock by the use of a simple stocking

system. The Tecreel department uses a two card system, more commonly known as a dual-card Kanban. This system utilises two cards one red and one blue, each attached to a container. The blue card quantity represents the working stock, the red card represents the buffer stock. In addition an ABC priority rating system is used to control the stocking of expensive items. Class 'A' items have the highest cost and usage and should therefore be kept to a minimum. Nisson motor employs a similar structure but call it the Action Plate Method (APM). [1]

TOTAL QUALITY CONTROL

This fundamental bedrock of JIT is often overlooked with high levels of WIP and stock, companies are often unaware they even have a quality problem, quality when measured as a percentage of factory cost is often as high as 20 to 30%. [2] The need is to move away from quality inspectors and complex procedures and systems, these approaches do not add value to the product. The Tecreel cell concentrated on out of control operations and used Statistical Process Control (SPC) techniques and Job Information Sheets (JIS) to improve the cells quality control.

SUMMARY OF RESULTS AND CONCLUSIONS

For the purposes of assessing the operational effectiveness before and after the implementation of the cell, review data on stock levels, production levels, man hours and lead time needed to be compiled. The data showed considerable improvements since the introduction of the cell, stock levels (-30%), lead time (-33%) showed the most dramatic improvements, stock level reduction alone produced a saving of 50K and the lead time reduction resulted in increased customer satisfaction. The large arrears in orders were virtually eliminated six weeks after implementation. Overall the cell approach has benefited the company and many of the improvements of it such as increased customer demand will not be realised until well after the scheme's completion.

REFERENCES

[1] McMillan, C. J. The Japanese Industrial System, Walter de Cruyter, NY (1985), pages 221-213.

[2] Jewitt, R. H. Managing into the 90's. DTI, 1990.

A SIMULATION STUDY INTO MANUFACTURING EFFECTIVENESS USING A JUST-IN-TIME APPROACH

Robin J Richmond, Roland S Burns - Dept of Mechanical Engineering
J F Pearce - Plymouth Business School
Polytechnic South West, Plymouth PL4 8AA UK

ABSTRACT

The aim of this paper is to consider the use of simulation to investigate manufacturing effectiveness when applying a Just-in-Time (JIT) approach to production processes. Manufacture in the company so far has consisted of grouping machine tools by function i.e. turning, milling and grinding. The company's manufacture consists of medium and large batch production and this type of layout produces unacceptable material flow. Current thinking is to group a number of different machines and operations associated with a product or product range into a cohesive manufacturing unit referred to as a "Group Technology Cell".

The paper utilises knowledge of the operational efficiencies for the present manufacturing layout and the information is used to validate the simulated manufacturing arrangement on computer. Comparisons are then made between the simulated and actual results and conclusions drawn as to the suitability of this type of simulation within a Just-in-Time manufacturing environment.

OVERVIEW OF PROJECT

The paper concentrates on a sponsored two year programme of work to implement a "Tecreel Cell" by a Teaching Company Associate. As part of this programme a computer simulation using 'SIMFACTORY' a simulation written in SIMSCRIPT II.5 language was used to assist in organising the flowline within a (JIT) manufacturing environment.

As part of the JIT methodology, a Total Quality Management (TQM) programme was also implemented with the use of Statistical Process Control (SPC) techniques and operator involvement in quality awareness procedures.

The overall approach or philosophy of JIT is the elimination of waste, a suitable definition of waste (Target 1988) is given by:-

Waste = "... anything other than the minimum amount of equipment, materials, parts, space and workers' time which are absolutely essential" (to add value to the product)

This means using the minimum amount of resource in the most efficient way to make production.

GROUP TECHNOLOGY CELL

Group Technology (GT) layouts are an essential foundation stone in the JIT philosophy, GT can decimate work in progress, reduce lead times and make a product much more responsive to customer demands. It is particularly relevant where a product is travelling tremendous distances on the shop floor before completion of all its operations. A case study once showed a product travelling two miles across a shop floor before it was finally manufactured. (Jewitt 1990)

The key objective when considering layouts is to determine what operations need to be together to produce a complete product or sub-assembly, then by grouping the operations by product family the shortest route to manufacture will be achieved. This layout will also form the foundation for automation if required.

SIMULATION MODEL BUILDING

A basic model for the simulation model construction and test is shown in Figure 1.

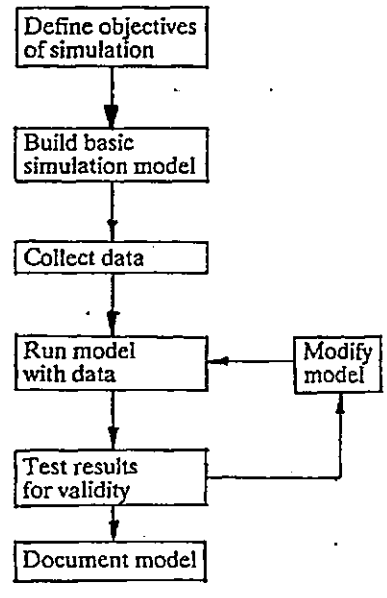

Figure 1
Steps in Building a Simulation Model

By approaching simulation in this manner, it affords experimenting without risk. It is also likely to be cheaper and safer to use a simulation model than to experiment with the real system. (Wild 1990)

SIMFACTORY II.5

SIMFACTORY II.5 is written in SIMSCRIPT II.5 simulation language, the programme is such that at no time does the user need to write computer code. SIMFACTORY is a factory simulation system designed for engineers and professionals who need to analyse problems quickly, it is a simulation tool that is intended to be used by engineers that are not dedicated to working at simulation full time and who have not attended specialised courses. (CACI 1990)

Applications of SIMFACTORY can be placed in two categories:-

i) Evaluation of a proposed system which has yet to be implemented.

ii) On-going decision support for an existing system to evaluate proposed changes in operating policies, product mixes, scheduling strategies and capacity analysis.

The latter of these two was used in the Tecreels case.

SIMULATION OF 'TECREEL' CELL

Tecreels are primarily hydraulic hosereels used for the transfer of fluid power up to nine metres. The Tecreel is attached to cranes and trucks and more commonly forklift trucks to power the functions of the vehicle such as side shift and tilt mechanisms.

There are four basic types of Tecreel and the flowline was based around the most popular type, the 375, the average monthly breakdown of Tecreel build was as follows:-

	375	Type 4	4 Part	Multifunction
Average Monthly Build	750	150	20	10

The flowline basically used an anti clockwise flow of work so that raw tinware entered the cell at one end and exited the cell at the other after proceeding through the following operations; degrease and shotblast, spot and projection welding, spraying, hub and shaft assembly and test, tinware assembly, spring build, spring assembly, hosing up, boxing up. Each of the assembly bench operators were timed so that all operations were approximately of equal length, and when a different type of reel was being produced the operations would change to keep timings approximately equal.

For the initial stages of simulation the 375 Tecreel was considered, timings were obtained for all operations with the use of a stop watch. The simplified model was represented as follows:-

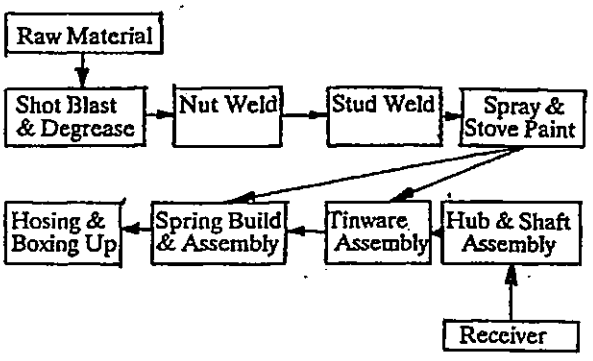

RESULTS AND CONCLUSIONS

A large variation between actual and simulated output of Tecreels (over 30% less on the simulated version) was found, time did not permit to finalise simulation trials before the conference.

i) It was apparent that difficulties could be encountered when using this simulation in a Just-in-Time environment mainly because it is not unusual for section supervisors to move staff around if stations become idle or blocked (i.e. cannot deliver part to next station) this is necessary to maintain low work in progress stocks. The simulation is unable to make these intelligent decisions and this can result in variance between simulated and real manufacturing output.

ii) Over complexity of the model can cause confusion, it is better to start with a simple model and verify this with the real life situation and add variations then to simulate and verify the manufacturing situation at present.

iii) Time needs to be dedicated to this simulation package, attempting to fit this in a normal work routine appears difficult, 'blocks' of time should be worked rather than intermittent type work.

REFERENCES

Spring/Summer 1988 issue of "Target" with permission of the association for "Manufacturing Excellence", Inc., (AME), 380 West Palatine Road, Wheeling 60090, USA. 312/520-3282

Jewitt, R H 1990. Just-in-Time, DTI Managing into the 90's.

Wild R 1990. "Production and Operations Managements" Fourth Edition, Cassel. 749-752.

SIMFACTORY II.5 Reference Manual and User's Guide. 1990 CACI Products Company, 4 Heron Square, Richmond, Surrey, TW9 1EW.